MINOR SITE PLAN

FOR

542, 546, 546.5 NORTH BROADWAY

LOTS 2 AND 3, BLOCK 117
PENNSVILLE TOWNSHIP
SALEM COUNTY, NEW JERSEY

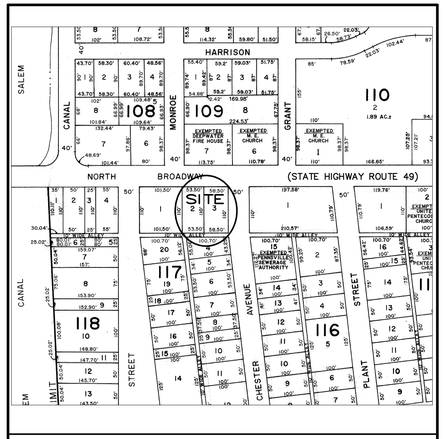

TAX MAP

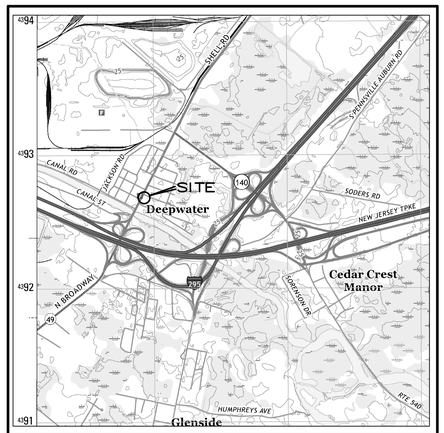

USGS QUADRANGLE

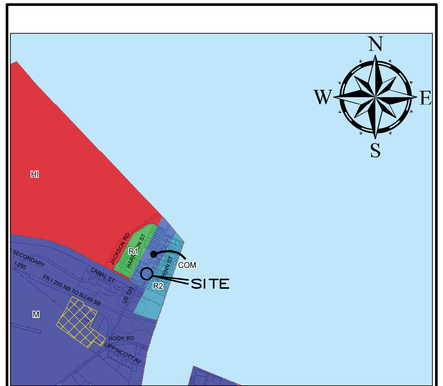

ZONING MAP
ZONE: "COM" COMMERCIAL

200 FOOT LIST

THE TOWNSHIP OF PENNSVILLE
Salem County, New Jersey
Municipal Building Annex
90 North Broadway, Pennsville, NJ 08070

Office of TAX ASSESSOR

Telephone: (856) 678-3089 ext. 135
Fax: (856) 678-3023

Your Ref: 546 & 546 ½ N Broadway

Applicant: RCR Properties

Block 117 Lot: 3

I certify that the following 200 foot list is an accurate and complete list of the property owners and addresses. They must be given notice pursuant to the requirements of NJSA 40:55D-12, which states that notice be given by personal service or certified mail. This list has been prepared from the most recent tax rolls.

Additionally, all applicants must give notice to the public utility at:

Atlantic City Electric; 5100 Harding Highway, Mays Landing, NJ 08330
South Jersey Gas; 1 S Jersey Plaza, Folsom, NJ 08037
Comcast Cablevision Corp.; One Comcast Center, Tax D, Philadelphia, PA 19103
Pennsville Sewerage Dept.; Ron Cooksey, 90 N Broadway, Pennsville, NJ 08070
Pennsville Water Dept.; Jack Lynch, 2 Sanderlin Rd., Pennsville, NJ 08070
Verizon-New Jersey, Administrative Offices; 540 Broad Street, Newark, NJ 07102
AT&T Com. Property Tax Dept.; PO Box 1329, Morristown, NJ 07962

If subject property is adjacent to a State Highway, the applicant must also give notice by personal service or certified mail to the NJ Commissioner of Transportation; 1035 Parkway Ave., CN-600, Trenton, NJ 08625.

If subject property is adjacent to a County Road, the applicant must also give notice to the Salem County Planning Board Division, 110 Fifth Street, Suite 500; Salem, NJ 08079.

If subject property is within 200 feet of an adjacent municipality, the applicant must also give notice to those owners and the municipal clerk of that municipality.

Signature of Tax Office:

Date: February 13, 2020
MLP/amc

OWNER & ADDRESS REPORT

PENNSVILLE
200 FOOT LIST
BLOCK 117 LOT 3

02/13/20 Page 1 of 2

BLOCK	LOT	QUAL	CLA	PROPERTY OWNER	PROPERTY LOCATION	Add'l Lots
108	5		2	ROBERTSON, KENNETH 2 MONROE ST P O BOX 419 DEEPWATER NJ 08023	2 MONROE ST	
108	6		1	HOGAN, JEFFREY J.& PAMELA J 114 EAST 11TH AVE NORTH WILDWOOD 08260	537 N BROADWAY	
108	7		2	SPOSATO, DOMENICO & PIETRO 52 EAST HARBORY STREET PENNS GROVE NJ 08069	533 N BROADWAY	
109	6		15D	CHURCH M.E. 555 N BROADWAY PO BOX 117 DEEPWATER NJ 08023	541 N BROADWAY	
109	7		15F	PENNSVILLE TOWNSHIP 90 N BROADWAY DEEPWATER NJ 08023	539 N BROADWAY	
109	8		2	RINNIER, DONALD D SR + CYNTHIA ANN PO BOX 326 DEEPWATER NJ 08023	2 MONROE ST	
110	1		15D	CHURCH M.E. 555 N BROADWAY PO BOX 117 DEEPWATER NJ 08023	555 N BROADWAY	
116	1		4A	SINDH, AMARJIT & GURMEJ 176 N PEARL STREET BRIDGETON NJ 08302	550 N BROADWAY	
116	2		2	WEBER, CONSTANCE A 7 PLANT ST PO BOX 87 DEEPWATER NJ 08023	7 PLANT ST	
116	3		1	WEBER, DWIGHT EB 7 PLANT ST PO BOX 87 DEEPWATER NJ 08023	PLANT ST	
116	13		2	SPARKS, DONALD D + PATRICIA A 17 ATLANTIC AVENUE PENNSVILLE NJ 08070	14 CHESTER AVE	
116	14		2	LAMB, DEBORAH PO BOX 165 DEEPWATER NJ 08023	12 CHESTER AVE	
116	15		15C	PENNSVILLE SEWERAGE AUTHORITY 90 N BROADWAY PENNSVILLE NJ 08070	CHESTER AVE	
117	1		4A	HOGAN, JEFFREY & PAMELA J 114 EAST 11TH AVE NORTH WILDWOOD 08260	538&538 1/2 N BROADWAY	
117	2		1	546 BROADWAY LLC 2001 COLLEGE DRIVE CLEMENTON NJ 08021	542 N BROADWAY	
117	3		4C	546 BROADWAY LLC 2001 COLLEGE DR. STE 19 CLEMENTON NJ 08021	546 & 546 1/2 N BROADWAY	
117	4		2	QUIRK, STEVEN L.& CAROL M 134 COMMISSIONERS PIKE WOODSTOWN NJ 08098	2&5 CHESTER AVE	
117	5		2	SINGH MAJINDER + SUKHWINDER 1 CHESTER GLOUCESTER CITY NJ 08030	7 CHESTER AVE	
117	6		2	HOLSHUE, KIMBERLY 13 CHESTER AVE BOX 113 DEEPWATER NJ 08023	9 CHESTER AVE	

OWNER & ADDRESS REPORT

PENNSVILLE
200 FOOT LIST
BLOCK 117 LOT 3

02/13/20 Page 2 of 2

BLOCK	LOT	QUAL	CLA	PROPERTY OWNER	PROPERTY LOCATION	Add'l Lots
117	7		1	GOLDSPOT BANK NAT TRUST CO, TRUSTEE 3815 S WEST TEMPLE SALT LAKE CITY UT 84115	13 CHESTER AVE	
117	8		2	ANDERSON, JARED + MELISSA 208 POINE KNOT ROAD PILESGROVE NJ 08098	15 CHESTER AVE	
117	17		2	BANKS, JAMES G + MELISSA 14 BROAD ST DEEPWATER NJ 08023	14 BROAD ST	
117	18		1	CARUSO, ANTHONY & ALMA 210 ELM ST FLORENCE NJ 08518	12 BROAD ST	
117	19		2	GROSSENDEL, E.P + GERALD + AHLERS,G B 2 NORTH STREET PENNSVILLE NJ 08070	8 BROAD ST	
117	20		2	MANGUCCIO, DAVID & GAIL M 19 DELAWARE DR PENNS GROVE NJ 08069	4 BROAD ST	

SITE INFORMATION

TAX MAP IDENTIFICATION:
LOT(S): 2 & 3
BLOCK: 117
PLATE: 1

OWNER NAME & ADDRESS:
546 BROADWAY LLC
2001 COLLEGE DRIVE
CLEMENTON NJ 08021

APPLICANT NAME & ADDRESS:
546 BROADWAY LLC
2001 COLLEGE DRIVE
CLEMENTON NJ 08021

I HEREBY CERTIFY THAT I AM THE OWNER OF RECORD OF THE SITE HEREIN DEPICTED AND THAT I CONCUR WITH THE PLAN(S).

PROPERTY OWNER: DATE

SHEET INDEX

SHEET NUMBER	SHEET DESCRIPTION
1	TITLE SHEET
2	EXISTING CONDITIONS AND DEMOLITION
3	SITE PLAN
4	LANDSCAPE & LIGHTING
5	SOIL EROSION
6	SOIL EROSION DETAILS & NOTES
7	GENERAL DETAILS
8	GENERAL DETAILS
9	
10	
11	
12	
13	
14	
15	
16	
17	
18	
19	
20	
21	
22	
23	
24	
25	

PENNSVILLE TOWNSHIP PLANNING BOARD

APPLICATION NO.

PLANNING BOARD PLANNER (DATE)

PLANNING BOARD CHAIRMAN (DATE)

PLANNING BOARD SECRETARY (DATE)

STANDARD PLAN LEGEND

PROPERTY LINE
CENTER LINE
EASEMENT LINE
GAS LINE
SANITARY SEWER LINE
WATER LINE
OVERHEAD WIRES
WETLANDS LINE
EDGE OF PAVING
RIPARIAN LINE
FLOODWAY LIMIT LINE (100 YR)
FLOOD HAZARD AREA LINE
ZONE LIMIT LINE
LIMIT OF DISTURBANCE
FENCES
EXISTING CONTOUR
PROPOSED CONTOUR
EXISTING SPOT ELEVATION
PROPOSED SPOT ELEVATION
VEGETATION LINE
TEST PIT / SOIL BORING
VALVES
METERS
SIGNS
UTILITY POLES
LIGHT POLES
FIRE HYDRANT
CLEANOUT
MAIL BOXES
CROSS CUT
DRILL HOLE W/ WINGS
FOUND MONUMENT
SET MONUMENT
FOUND IRON ROD/PIPE
SET IRON ROD/PIPE
INLETS
MANHOLES
TRAFFIC SIGNAL

JAMES A. CLANCY
Professional Engineer & Land Surveyor
Professional Planner
Professional Engineer
Professional Engineer
Professional Land Surveyor
NJ LIC. # 33996
NJ LIC. # 04200
DE LIC. # 12078
PA LIC. # 42340
PA LIC. # 61357
2/12/20
Date

H. C. E. & S., LLC
CONSULTING ENGINEERS
Engineers • Land Surveyors • Planners
601 Asbury Avenue
National Park, NJ 08063
Phone: (856) 853-7306
Fax: (856) 853-7381
CERTIFICATE OF AUTHORIZATION NO. 24GA27943500

TITLE SHEET
FOR
542, 546 & 546.5 NORTH BROADWAY

LOT(S): 2 & 3
BLOCK: 117, PLATE: 1

TOWNSHIP OF PENNSVILLE
SALEM COUNTY, NEW JERSEY

CLIENT: ARCR PROPERTIES, LLC
DATE: 9/27/19 | DRAWN: RAS | CHECKED: JAC
JOB #: C-25319 | SCALE: NONE | SHEET: 1 OF 8

– REVISIONS –

ISSUE	DATE	DESCRIPTION

GENERAL NOTES:

THIS PLAN WAS PREPARED WITHOUT THE BENEFIT OF A REPORT OF TITLE AND IS SUBJECT TO ANY EASEMENT ON, ABOVE OR BELOW THE GROUND OR ANY OTHER PERTINENT FACT THAT SUCH A REPORT MAY DISCLOSE THAT MAY ALTER THIS PLAN. THE PRESENCE OF WETLANDS, WETLANDS BUFFER AND/OR ANY OTHER ENVIRONMENTAL STUDY TYPE LINES, RESTRICTIONS OR CONDITIONS ARE NOT SHOWN ON THIS PLAN AND HAVE NOT BEEN DETERMINED.

THIS PLAN WAS PREPARED BASED A PLAN OF SURVEY & TOPOGRAPHY FOR 542, 546 & 546.5 NORTH BROADWAY, LOTS 2 & 3, BLOCK 117, PENNSVILLE TOWNSHIP, BY H.C.E. & S., LLC., DATED 8/22/19.

BEING LOTS 2 & 3, BLOCK 117 ON THE PENNSVILLE TOWNSHIP TAX MAP.

VERTICAL DATUM ASSUMED.

THIS SITE IS PARTIALLY LOCATED IN FLOOD ZONE "AE" AND MOSTLY IN FLOOD ZONE "X" AS DEPICTED ON FIRM MAP #34033C0061C, EFFECTIVE DATE: JUNE 16, 2016.

DEMOLITION NOTES:

ALL OVERHEAD WIRE UTILITIES SERVICING THE EXISTING STRUCTURE TO BE DEMOLISHED SHALL BE REMOVED BACK TO THE POLE AND ALL UNDERGROUND UTILITIES SHALL BE REMOVED AND CAPPED AT THE STREET.

DENOTES AREA OF DEMOLITION

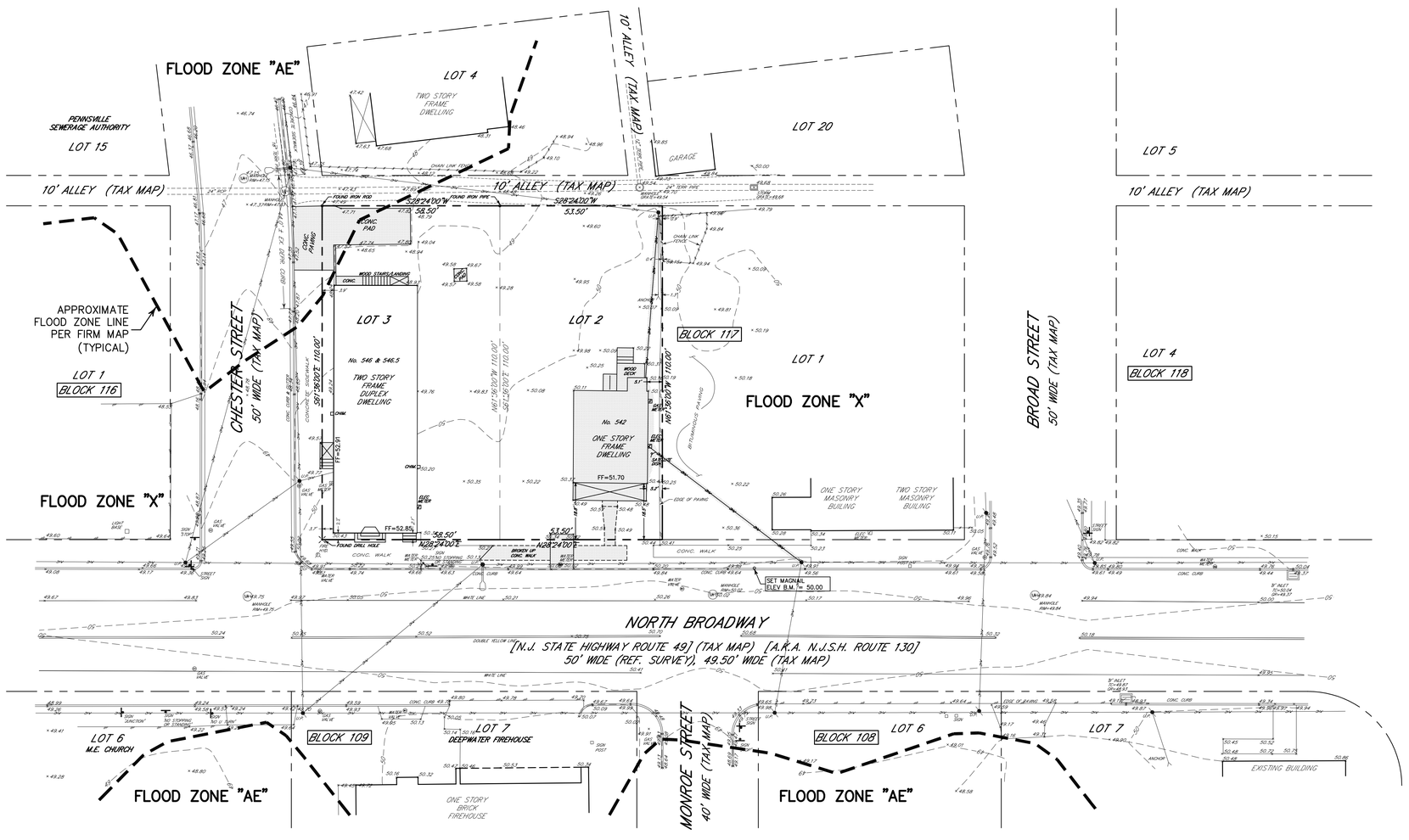

CONTRACTOR'S RESPONSIBILITY:

LOCATIONS OF UTILITIES SHOWN ON THIS PLAN AREA NOT NECESSARILY COMPLETE. THE CONTRACTOR SHALL NOTIFY ALL UTILITY COMPANIES OPERATING WITHIN THE CONSTRUCTION AREA AND AT HIS OWN EXPENSE VERIFY THE LOCATION, SIZE, TYPE AND ELEVATION OF ANY UTILITIES PRIOR TO CONSTRUCTION. IT IS THE RESPONSIBILITY OF THE OWNER AND/OR CONTRACTOR TO DIAL '811' (WHICH WILL ROUTE YOU TO THE 'ONE CALL' CENTER FOR YOUR STATE) FOR FIELD LOCATION OF UNDERGROUND UTILITIES PRIOR TO CONSTRUCTION. YOU CAN ALSO USE THE WEBSITE "CALL811.COM".

SITE SAFETY:

THE CONTRACTOR IS TO DESIGNATE AN INDIVIDUAL RESPONSIBLE FOR CONSTRUCTION SITE SAFETY DURING THE COURSE OF SITE IMPROVEMENTS PURSUANT TO N.J.A.C. 5:23-2.21(c) OF THE NJ UNIFORM CONSTRUCTION CODE AND CFR 1926.32(f) (OSHA COMPETENT PERSON).

SCALE: 1"=20'

0 10 20 40 60 100

JAMES A. CLANCY

Professional Engineer & Land Surveyor	NJ LIC. # 33996	2/12/20 Date
Professional Planner	NJ LIC. # 04200	
Professional Engineer	DE LIC. # 12078	
Professional Engineer	PA LIC. # 42340	
Professional Land Surveyor	PA LIC. # 61357	

H. C. E. & S., LLC
CONSULTING ENGINEERS
Engineers • Land Surveyors • Planners
601 Asbury Avenue
National Park, NJ 08063
Phone: (856) 853-7306
Fax: (856) 853-7381
CERTIFICATE OF AUTHORIZATION NO. 24GA27943500

PLAN OF EXISTING CONDITIONS & DEMOLITION

FOR

542, 546 & 546.5 NORTH BROADWAY

LOT(S): 2 & 3
BLOCK: 117, PLATE: 1
TOWNSHIP OF PENNSVILLE
SALEM COUNTY, NEW JERSEY

CLIENT: ARCR PROPERTIES, LLC		
DATE: 9/27/19	DRAWN: RAS	CHECKED: JAC
JOB#: C-25319	SCALE: 1"=20'	SHEET: 2 OF 8

– REVISIONS –

ISSUE	DATE	DESCRIPTION

ZONE: "COM" COMMERCIAL (WITH PERMITTED CONDITIONAL USE)

CONDITIONAL USE:

5. RESIDENTIAL APARTMENTS OCCUPYING PORTIONS OF A COMMERCIAL BUILDING IF SUCH BUILDING IS THE SITE OF AN OTHERWISE PERMITTED PRINCIPAL USE, SUBJECT TO THE FOLLOWING REQUIREMENTS:
A. A SEPARATE BUILDING ENTRANCE IS REQUIRED FOR EACH RESIDENTIAL APARTMENT.
B. OFF-STREET PARKING: A MINIMUM OF ONE AND ONE-HALF (1 1/2) OFF-STREET PARKING SPACES MUST BE PROVIDED FOR EACH RESIDENTIAL APARTMENT UNIT.

CHAPTER 5 SECTION 5.9.B.1 – ANY USE PERMITTED IN THE R-1, R-2 AND R-3 RESIDENCE DISTRICTS, SUBJECT TO ALL CHAPTER 5, SECTION 5.8.E.2 (R-2) DISTRICT LOT AREA, DIMENSION, CONFIGURATION, COVERAGE, SETBACK AND HEIGHT REQUIREMENTS.

*** NOTE: FOR THE PURPOSES OF THE ZONING TABLE, LOTS 2 & 3 WILL BE CONSIDERED AS CONSOLIDATED.

	REQUIRED	EXISTING	PROPOSED
MIN LOT AREA	15000 SQ FT	12320 SQ FT *	12320 SQ FT **
MIN LOT FRONTAGE	100 FT	107.00 FT	107.00 FT
MIN LOT WIDTH	100 FT	107.00 FT	107.00 FT
MIN LOT DEPTH	85 FT	110.00 FT	110.00 FT
MIN FRONT YARD	35 FT	2.1 FT *	2.1 FT **
MIN SIDE YARD	15 FT	3.7 FT *	3.7 FT **
MIN REAR HARD	20 FT	26.2 FT	26.2 FT
MAX BLDG HEIGHT	2.5 STORIES, 45 FT	2 STY, 30 FT±	2 STY, 32 FT±
MAX # OF PRINCIPLE STRUCTURES PER LOT	1	2 *	1
MAX PRINCIPLE STRUCTURE COVER	28%	25.6%	24.1%
MAX IMPERVIOUS COVER	45%	34.7%	85.1% **

* PRE-EXISTING, NON-CONFORMING CONDITION
** VARIANCE REQUIRED

ACCESSORY STRUCTURE BULK REGULATIONS:
F. FRONT YARD (ACCESSORY STRUCTURES): 35 FEET MINIMUM OR NO LESS THAN THE GREATEST ACTUAL FRONT YARD SETBACK OF THE PRINCIPAL STRUCTURE FROM EACH STREET, WHICHEVER IS GREATER
H. SIDE YARD (ACCESSORY STRUCTURES)*: 6 FEET MINIMUM
J. REAR YARD (ACCESSORY STRUCTURE)*: 6 FEET MINIMUM
M. HEIGHT (ACCESSORY STRUCTURES): 15 FEET MAXIMUM** (**EXCEPT AGRICULTURAL NONRESIDENTIAL STRUCTURE)
O. NUMBER OF ACCESSORY STRUCTURES ON LOT: SHALL BE LIMITED BY THE TOTAL IMPERVIOUS MATERIALS COVERAGE AS IS SET FORTH IN SUB-PARAGRAPH T BELOW** (**EXCEPT AGRICULTURAL NONRESIDENTIAL STRUCTURE)
Q. STORIES (ACCESSORY STRUCTURES): 1 1/2 STORIES MAXIMUM (NO BASEMENT)** (**EXCEPT AGRICULTURAL NON-RESIDENTIAL STRUCTURE)
S. STRUCTURE COVERAGE (ACCESSORY STRUCTURES): LESSER OF 9% OR 900 S.F. (MAXIMUM PER STRUCTURE)

GENERAL NOTES:

THIS PLAN WAS PREPARED WITHOUT THE BENEFIT OF A REPORT OF TITLE AND IS SUBJECT TO ANY EASEMENT ON, ABOVE OR BELOW THE GROUND OR ANY OTHER PERTINENT FACT THAT SUCH A REPORT MAY DISCLOSE THAT MAY ALTER THIS PLAN. THE PRESENCE OF WETLANDS, WETLANDS BUFFER AND/OR ANY OTHER ENVIRONMENTAL STUDY TYPE LINES, RESTRICTIONS OR CONDITIONS ARE NOT SHOWN ON THIS PLAN AND HAVE NOT BEEN DETERMINED.

THIS PLAN WAS PREPARED BASED A PLAN OF SURVEY & TOPOGRAPHY FOR 542, 546 & 546.5 NORTH BROADWAY, LOTS 2 & 3, BLOCK 117, PENNSVILLE TOWNSHIP, BY H.C.E. & S., LLC., DATED 8/22/19.

BEING LOTS 2 & 3, BLOCK 117 ON THE PENNSVILLE TOWNSHIP TAX MAP.

VERTICAL DATUM ASSUMED.

THIS SITE IS PARTIALLY LOCATED IN FLOOD ZONE "AE" AND MOSTLY IN FLOOD ZONE "X" AS DEPICTED ON FIRM MAP #34033C0061C, EFFECTIVE DATE: JUNE 16, 2016.

ALL PAINT MARKINGS SHALL BE LONG LIFE THERMOPLASTIC RESIN.

OFF-STREET PARKING:

RESIDENTIAL: 1.5 SPACES REQUIRED FOR EACH APARTMENT UNIT.

OFFICE: 1 SPACE PER 200 SQ FT

NUMBER OF APARTMENT UNITS PROPOSED = 11

RESIDENTIAL: 11 * 1.5 = 16.5 (17) SPACES REQUIRED AT A MINIMUM

1 OFFICE @ 252 SQ FT ± = 2 SPACES REQUIRED AT A MINIMUM

TOTAL REQUIRED MINIMUM SPACES = 19

21 PARKING SPACES TOTAL ARE PROVIDED

WAIVERS REQUESTED:

* DESIGN WAIVER REQUESTED FOR DRIVEWAYS DUE TO PROPOSED WIDTHS AND PROXIMITIES TO PROPERTY LINES AND OTHER DRIVEWAYS.

* DESIGN WAIVER REQUESTED FOR CURBING OF PARKING LOT. NONE PROPOSED TO PROMOTE STORMWATER SHEET FLOW.

* DESIGN WAIVER REQUESTED FOR STORM FACILITIES. NONE PROPOSED DUE TO ONLY A 0.14 ACRE NET GAIN OF IMPERVIOUS ON-SITE (LESS THAN THE 0.25 ACRE MINIMUM FOR STORM MANAGEMENT).

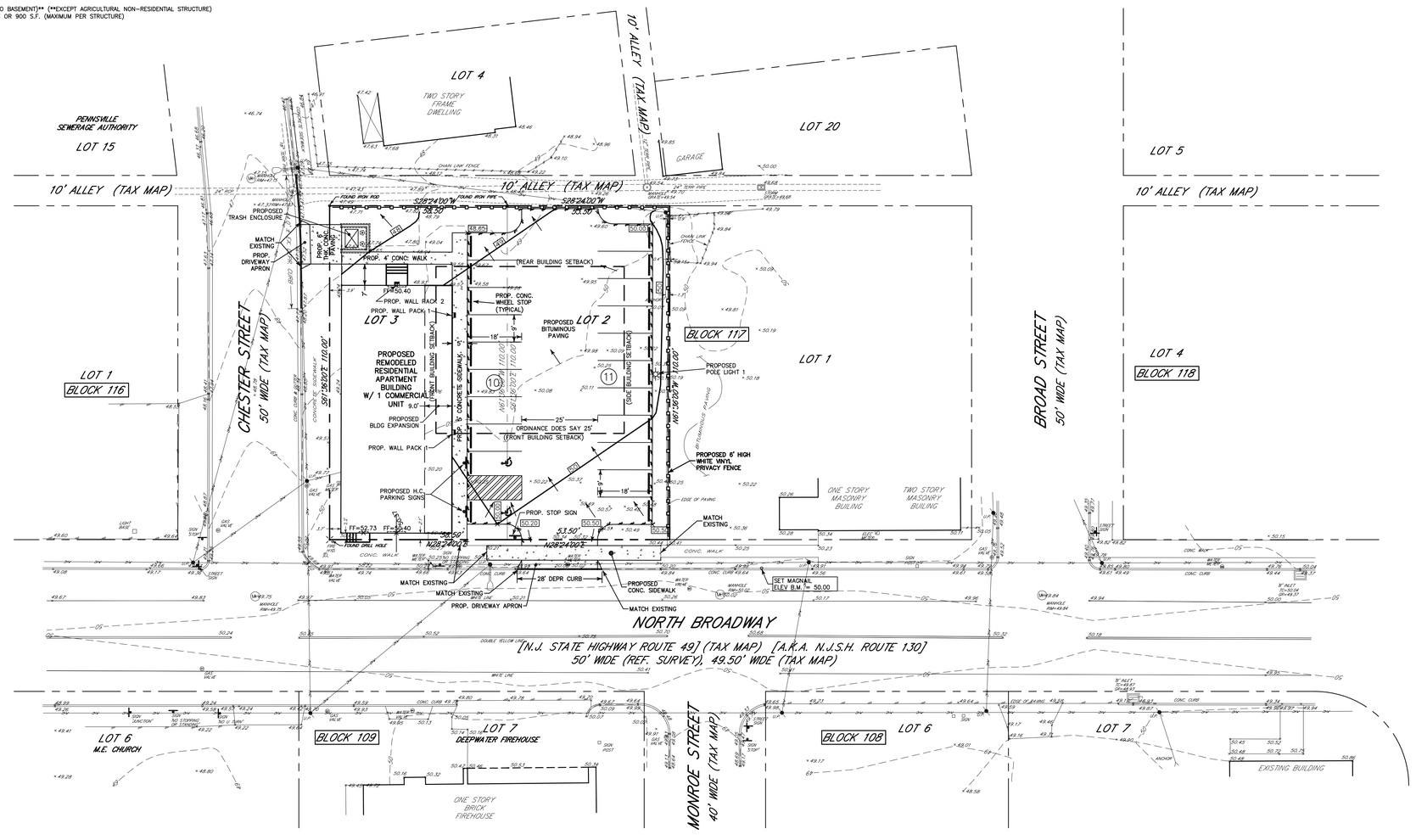

SCALE: 1"=20'
0 10 20 40 60 100

CONTRACTOR'S RESPONSIBILITY:

LOCATIONS OF UTILITIES SHOWN ON THIS PLAN AREA NOT NECESSARILY COMPLETE. THE CONTRACTOR SHALL NOTIFY ALL UTILITY COMPANIES OPERATING WITHIN THE CONSTRUCTION AREA AND AT HIS OWN EXPENSE VERIFY THE LOCATION, SIZE, TYPE AND ELEVATION OF ANY UTILITIES PRIOR TO CONSTRUCTION. IT IS THE RESPONSIBILITY OF THE OWNER AND/OR CONTRACTOR TO DIAL '811' (WHICH WILL ROUTE YOU TO THE 'ONE CALL' CENTER FOR YOUR STATE) FOR FIELD LOCATION OF UNDERGROUND UTILITIES PRIOR TO CONSTRUCTION. YOU CAN ALSO USE THE WEBSITE "CALL811.COM".

SITE SAFETY:

THE CONTRACTOR IS TO DESIGNATE AN INDIVIDUAL RESPONSIBLE FOR CONSTRUCTION SITE SAFETY DURING THE COURSE OF SITE IMPROVEMENTS PURSUANT TO N.J.A.C. 5:23-2.21(c) OF THE NJ UNIFORM CONSTRUCTION CODE AND CFR 1926.32(f) (OSHA COMPETENT PERSON).

JAMES A. CLANCY
Professional Engineer & Land Surveyor — NJ LIC. # 33998
Professional Planner — NJ LIC. # 04200
Professional Engineer — DE LIC. # 12078
Professional Engineer — PA LIC. # 42340
Professional Land Surveyor — PA LIC. # 61357
2/12/20
Date

H. C. E. & S., LLC
CONSULTING ENGINEERS
Engineers • Land Surveyors • Planners
601 Asbury Avenue
National Park, NJ 08063
Phone: (856) 853-7306
Fax: (856) 853-7381
CERTIFICATE OF AUTHORIZATION NO. 24GA27943500

SITE PLAN
FOR
542, 546 & 546.5 NORTH BROADWAY
LOT(S): 2 & 3
BLOCK: 117, PLATE: 1
TOWNSHIP OF PENNSVILLE
SALEM COUNTY, NEW JERSEY

CLIENT: ARCR PROPERTIES, LLC		
DATE: 9/27/19	DRAWN: RAS	CHECKED: JAC
JOB#: C-25319	SCALE: 1"=20'	SHEET: 3 OF 8

– REVISIONS –

ISSUE	DATE	DESCRIPTION

LANDSCAPE PLANTING NOTES:

1) PLANT MATERIAL SHALL BE FURNISHED AND INSTALLED AS INDICATED, INCLUDING ALL LABOR MATERIAL, PLANTS, EQUIPMENT, INCIDENTALS AND CLEAN-UP.

2) THE CONTRACTOR SHALL BE RESPONSIBLE FOR PLANTING AT CORRECT GRADES AND ALIGNMENT.

3) PLANTS SHALL BE TYPICAL OF THEIR SPECIES AND VARIETY, HAVE NORMAL GROWTH HABITS, WELL DEVELOPED BRANCHES, DENSELY FOLIATED, VIGOROUS ROOT SYSTEMS AND BE FREE FROM DEFECTS OR INJURIES.

4) CONTRACTORS SHALL REPORT ANY SOIL OR DRAINAGE CONDITIONS CONSIDERED DETRIMENTAL TO THE GROWTH OF PLANT MATERIAL.

5) PLANT GUARANTEE: ALL PLANT MATERIALS SHALL BE GUARANTEED BY THE CONTRACTOR TO BE IN VIGOROUS GROWING CONDITION. PROVISION SHALL BE MADE FOR A GROWTH GUARANTEE OF AT LEAST 2 YEARS FOR TREE AND A MINIMUM OF 2 GROWING SEASONS FOR SHRUBS. REPLACEMENTS SHALL BE MADE AT THE BEGINNING OF THE FIRST SUCCEEDING PLANTING SEASON. ALL REPLACEMENTS SHALL HAVE A GUARANTEE SIMILAR TO THAT STATED ABOVE.

6) IN SO FAR AS IT IS PRACTICAL, PLANT MATERIAL SHALL BE PLANTED ON DAY OF DELIVERY IN THE EVENT IT IS NOT POSSIBLE, THE CONTRACTOR SHALL PROTECT STOCK NOT PLANTED. PLANTS SHALL NOT REMAIN UNPLANTED FOR A PERIOD GREATER THAN THREE DAYS.

7) QUALITY AND SIZE OF PLANTS, SPREAD OF ROOTS AND SIZE OF BALLS SHALL BE IN ACCORDANCE WITH ANSI Z60 (rev.1980) "AMERICAN STANDARD FOR NURSERY STOCK" AS PUBLISHED BY THE AMERICAN ASSOC. OF NURSERYMEN, INC.

8) ALL PLANTS SHALL BE PLANTED IN TOP SOIL THAT IS THOROUGHLY WATERED AND TAMPED AS BACKFIELD PROGRESSES, NOTHING BUT SUITABLE TOPSOIL, FREE OF DRY SOD, STIFF CLAY, LITTER, ETC., SHALL BE USED FOR PLANTING.

9) PLANTS SHALL NOT BE BOUND WITH WIRE OR ROPE AT ANY TIME SO AS TO DAMAGE THE BARK OR BREAK BRANCHES. PLANTS SHALL BE HANDLED FROM THE BOTTOM OF THE BALL, ONLY.

10) PLANTING OPERATIONS SHALL BE PERFORMED DURING THE PERIODS WITHIN THE PLANTING SEASON WHEN WEATHER AND SOIL CONDITIONS ARE SUITABLE AND IN ACCORDANCE WITH ACCEPTABLE LOCAL PRACTICE.

11) NO PLANT, EXCEPT GROUND COVERS, SHALL BE PLANTED LESS THAN TWO FEET FROM EXISTING STRUCTURE AND SIDEWALKS.

12) SET PLANTS PLUMB AND STRAIGHT, SET AT SUCH LEVEL THAT, AFTER SETTLEMENT, A NORMAL NATURAL RELATIONSHIP TO THE CROWN OF THE PLANT WITH THE GROUND SURFACE WILL BE ESTABLISHED. LOCATE PLANT IN CENTER OF THE PIT.

13) ALL INJURED ROOTS SHALL BE PRUNED TO MAKE CLEAN ENDS BEFORE PLANTING. IT IS ADVISABLE TO PRUNE APPROXIMATELY 1/3 OF THE GROWTH OF LARGE TREES. (3" CALIPER AND OVER) BY THE REMOVAL OF SUPERFLUOUS BRANCHES, THOSE WHICH CROSS, RUN PARALLEL, ETC. MAIN LEADER OF TREE MUST NOT BE CUT BACK. LONG SIDE BRANCHES

14) ALL PLANTING BEDS SHALL RECEIVE 4" OF SHREDDED HARDWOOD BARK MULCH, TREATED WITH PREEMERGENT HERBICIDE.

15) ALL PLANTINGS WITHIN THE SIGHT TRIANGLE SHALL HAVE A MAXIMUM MATURE HEIGHT OF 30 INCHES. ALL STREET TREES WITHIN THE SIGHT TRIANGLE MUST HAVE THE BRANCH STRUCTURE START AT A MINIMUM DISTANCE OF SEVEN (7) FEET FROM THE FINISHED GRADE/GROUND.

LANDSCAPE TABLE

SYMBOL	QTY	COMMON NAME	BOTANICAL NAME	PLANTING SIZE
	8	WHITE PINE	BOTANICAL NAME	2-1/2" - 3" CAL, B&B
	18	RHODODENDRON	RHODODENDRON	36", 3 GAL POT
	6	EMERALD GREEN ARBORVITAE	THUJA OCCIDENTALIS 'SMARAGD'	4'-6', POT OR B&B

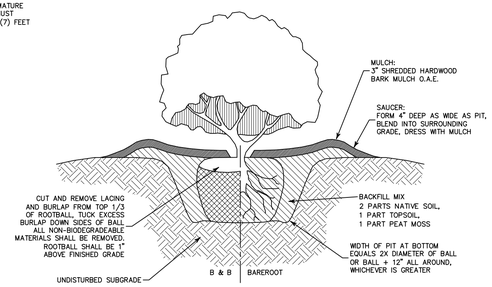

TYPICAL SHRUB PLANTING

[SCALE: N.T.S.]

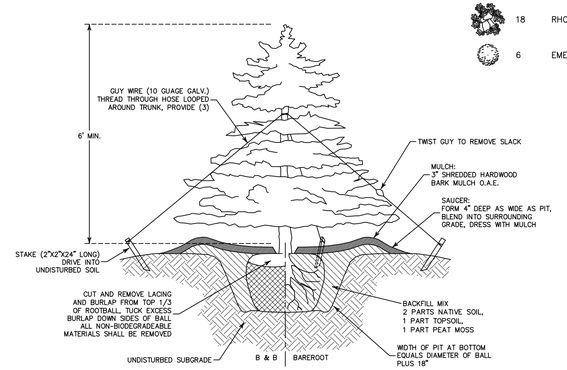

CONIFEROUS TREE PLANTING DETAIL

[SCALE: N.T.S.]

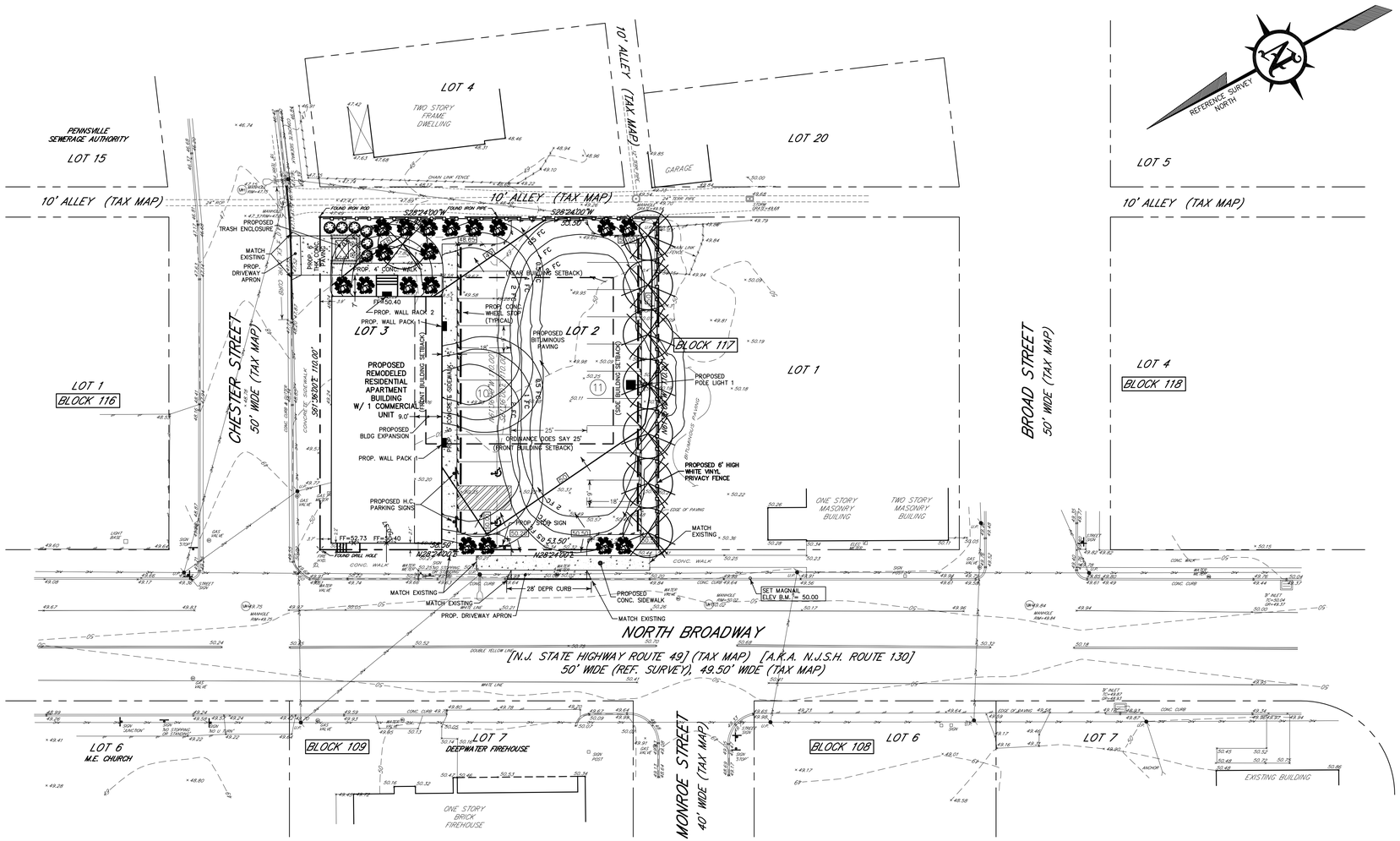

CONTRACTOR'S RESPONSIBILITY:

LOCATIONS OF UTILITIES SHOWN ON THIS PLAN AREA NOT NECESSARILY COMPLETE. THE CONTRACTOR SHALL NOTIFY ALL UTILITY COMPANIES OPERATING WITHIN THE CONSTRUCTION AREA AND AT HIS OWN EXPENSE VERIFY THE LOCATION, SIZE, TYPE AND ELEVATION OF ANY UTILITIES PRIOR TO CONSTRUCTION. IT IS THE RESPONSIBILITY OF THE OWNER AND/OR CONTRACTOR TO DIAL '811' (WHICH WILL ROUTE YOU TO THE 'ONE CALL' CENTER FOR YOUR STATE) FOR FIELD LOCATION OF UNDERGROUND UTILITIES PRIOR TO CONSTRUCTION. YOU CAN ALSO USE THE WEBSITE "CALL811.COM".

SITE SAFETY:

THE CONTRACTOR IS TO DESIGNATE AN INDIVDUAL RESPONSIBLE FOR CONSTRUCTION SITE SAFETY DURING THE COURSE OF SITE IMPROVEMENTS PURSUANT TO N.J.A.C. 5:23-2.21(c) OF THE NJ UNIFORM CONSTRUCTION CODE AND CFR 1926.32(f) (OSHA COMPETENT PERSON).

SCALE: 1"=20'

0 10 20 40 60 100

JAMES A. CLANCY

Professional Engineer & Land Surveyor — NJ LIC. # 33998
Professional Planner — NJ LIC. # 04200
Professional Engineer — DE LIC. # 12078
Professional Engineer — PA LIC. # 42340
Professional Land Surveyor — PA LIC. # 61337

2/12/20
Date

H. C. E. & S., LLC
CONSULTING ENGINEERS
Engineers • Land Surveyors • Planners

601 Asbury Avenue
National Park, NJ 08063
Phone: (856) 853-7306
Fax: (856) 853-7381
CERTIFICATE OF AUTHORIZATION NO. 24GA27943500

LANDSCAPE & LIGHTING PLAN

FOR

542, 546 & 546.5 NORTH BROADWAY

LOT(S): 2 & 3
BLOCK: 117, PLATE: 1
TOWNSHIP OF PENNSVILLE
SALEM COUNTY, NEW JERSEY

CLIENT: ARCR PROPERTIES, LLC
DATE: 9/27/19
DRAWN: RAS
CHECKED: JAC
JOB#: C-25319
SCALE: 1"=20'
SHEET: 4 OF 8

– REVISIONS –

ISSUE	DATE	DESCRIPTION

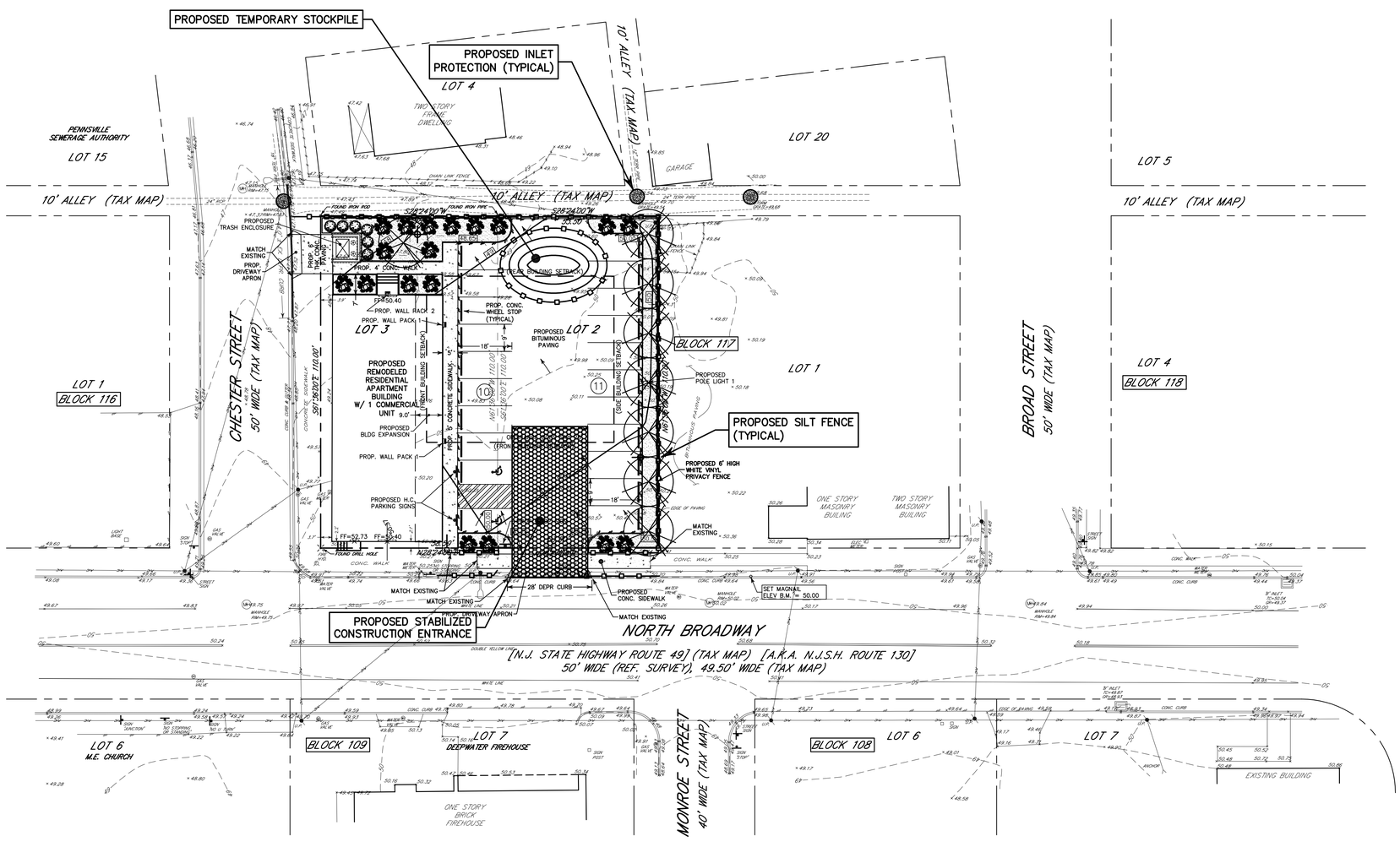

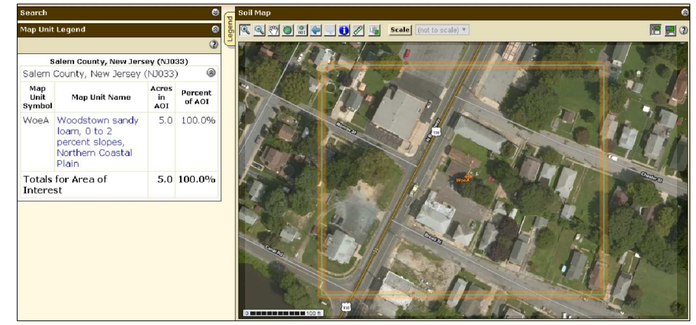

NRCS SOILS MAP

LIMITS OF DISTURBANCE:
9531± SQ FT (0.219± AC)

SOIL DE-COMPACTION TESTING AREAS

RECOMMENDED SOIL COMPACTION TEST LOCATION (APPROX. 1 PER 0.5 ACRES)

CONTRACTOR'S RESPONSIBILITY:

LOCATIONS OF UTILITIES SHOWN ON THIS PLAN AREA NOT NECESSARILY COMPLETE. THE CONTRACTOR SHALL NOTIFY ALL UTILITY COMPANIES OPERATING WITHIN THE CONSTRUCTION AREA AND AT HIS OWN EXPENSE VERIFY THE LOCATION, SIZE, TYPE AND ELEVATION OF ANY UTILITIES PRIOR TO CONSTRUCTION. IT IS THE RESPONSIBILITY OF THE OWNER AND/OR CONTRACTOR TO DIAL '811' (WHICH WILL ROUTE YOU TO THE 'ONE CALL' CENTER FOR YOUR STATE) FOR FIELD LOCATION OF UNDERGROUND UTILITIES PRIOR TO CONSTRUCTION. YOU CAN ALSO USE THE WEBSITE "CALL811.COM".

SITE SAFETY:

THE CONTRACTOR IS TO DESIGNATE AN INDIVIDUAL RESPONSIBLE FOR CONSTRUCTION SITE SAFETY DURING THE COURSE OF SITE IMPROVEMENTS PURSUANT TO N.J.A.C. 5:23-2.21(c) OF THE NJ UNIFORM CONSTRUCTION CODE AND CFR 1926.32(f) (OSHA COMPETENT PERSON).

SCALE: 1"=20'

0 10 20 40 60 100

JAMES A. CLANCY

Professional Engineer & Land Surveyor	NJ LIC. # 33998	2/12/20
Professional Planner	NJ LIC. # 04200	Date
Professional Engineer	DE LIC. # 12078	
Professional Engineer	PA LIC. # 42340	
Professional Land Surveyor	PA LIC. # 61357	

H. C. E. & S., LLC
CONSULTING ENGINEERS
Engineers • Land Surveyors • Planners
601 Asbury Avenue
National Park, NJ 08063
Phone: (856) 853-7306
Fax: (856) 853-7381
CERTIFICATE OF AUTHORIZATION NO. 24GA27943500

SOIL EROSION PLAN

FOR

542, 546 & 546.5 NORTH BROADWAY

LOT(S): 2 & 3
BLOCK: 117, PLATE: 1
TOWNSHIP OF PENNSVILLE
SALEM COUNTY, NEW JERSEY

CLIENT: ARCR PROPERTIES, LLC	
DATE: 9/27/19	DRAWN: RAS
JOB#: C-25319	SCALE: 1"=20'
CHECKED: JAC	SHEET: 5 OF 8

– REVISIONS –

ISSUE	DATE	DESCRIPTION

SOIL EROSION AND SEDIMENT CONTROL NOTES

1. ALL APPLICABLE EROSION AND SEDIMENT CONTROL PRACTICES SHALL BE IN PLACE PRIOR TO ANY GRADING OPERATION AND /OR INSTALLATION OF PROPOSED STRUCTURES OR UTILITIES.
2. SOIL EROSION AND SEDIMENT CONTROL PRACTICES ON THIS PLAN SHALL BE CONSTRUCTED IN ACCORDANCE WITH THE STANDARDS FOR SOIL EROSION AND SEDIMENT CONTROL OF NEW JERSEY.
3. APPLICABLE EROSION AND SEDIMENT CONTROL PRACTICES SHALL BE LEFT IN PLACE UNTIL CONSTRUCTION IS COMPLETED AND/OR THE AREA IS STABILIZED.
4. THE CONTRACTOR SHALL PERFORM ALL WORK, FURNISH ALL MATERIALS AND INSTALL ALL MEASURES REQUIRED TO REASONABLY CONTROL SOIL EROSION RESULTING FROM CONSTRUCTION OPERATIONS AND PREVENT EXCESSIVE FLOW OF SEDIMENT FROM THE CONSTRUCTION SITE.
5. ANY DISTURBED AREA THAT IS TO BE LEFT EXPOSED FOR MORE THAN THIRTY (30) DAYS AND NOT SUBJECT TO CONSTRUCTION TRAFFIC SHALL IMMEDIATELY RECEIVE A TEMPORARY SEEDING AND FERTILIZATION IN ACCORDANCE WITH THE NEW JERSEY STANDARDS AND THEIR RATES SHOULD BE INCLUDED IN THE NARRATIVE. IF THE SEASON PROHIBITS TEMPORARY SEEDING, THE DISTURBED AREAS WILL BE MULCHED WITH SALT HAY OR EQUIVALENT AND ANCHORED IN ACCORDANCE WITH THE NEW NEW JERSEY STANDARDS (I.E. AND TWINE, MULCH NETTING OR LIQUID MULCH BINDER).
6. IT SHALL BE THE RESPONSIBILITY OF THE DEVELOPER TO PROVIDE CONFIRMATION OF LIME, FERTILIZER AND SEED APPLICATION AND RATES OF APPLICATION AT THE REQUEST OF THE SALEM SOIL CONSERVATION DISTRICT.
7. ALL CRITICAL AREAS SUBJECT TO EROSION WILL RECEIVE A TEMPORARY SEEDING IN COMBINATION WITH STRAW MULCH AT A RATE OF 2 TONS PER ACRE, ACCORDING TO THE NEW JERSEY STANDARDS IMMEDIATELY FOLLOWING ROUGH GRADING.
8. THE SITE SHALL AT ALL TIMES BE GRADED AND MAINTAINED SUCH THAT ALL STORMWATER RUNOFF IS DIVERTED TO SOIL EROSION AND SEDIMENT CONTROL FACILITIES.
9. ALL SEDIMENTATION STRUCTURES WILL BE INSPECTED AND MAINTAINED ON A REGULAR BASIS AND AFTER EVERY STORM EVENT.
10. A CRUSHED STONE, TIRE CLEANING PAD WILL BE INSTALLED WHEREVER A CONSTRUCTION ACCESS EXISTS. THE STABILIZED PAD WILL BE INSTALLED ACCORDING TO THE STANDARD FOR STABILIZED CONSTRUCTION ACCESS.
11. ALL DRIVEWAYS MUST BE STABILIZED WITH 2-1/2" CRUSHED STONE OR SUBBASE PRIOR TO INDIVIDUAL LOT CONSTRUCTION.
12. PAVED AREAS MUST BE KEPT CLEAN AT ALL TIMES.
13. ALL CATCH BASIN INLETS WILL BE PROTECTED ACCORDING TO THE CERTIFIED PLAN
14. ALL STORM DRAINAGE OUTLETS WILL BE STABILIZED, AS REQUIRED, BEFORE THE DISCHARGE POINTS BECOME OPERATIONAL.
15. ALL DEWATERING OPERATIONS MUST DISCHARGE DIRECTLY INTO A SEDIMENT FILTER SHOULD BE COMPOSED OF A SUITABLE SEDIMENT FILTER FABRIC. (SEE DETAIL). THE BASIN MUST BE DEWATERED TO NORMAL POOL WITHIN 10 DAYS OF THE DESIGN STORM.
16. NJSA 4:24-39, ET SEQ. REQUIRES THAT NO CERTIFICATE OF OCCUPANCY BE ISSUED BEFORE ALL PROVISIONS OF THE CERTIFIED SOIL EROSION AND SEDIMENT CONTROL PLAN HAVE BEEN COMPLIED WITH FOR PERMANENT MEASURES. ALL SITE WORK FOR THE PROJECT MUST BE COMPLETED PRIOR TO THE DISTRICT ISSUING A REPORT OF COMPLIANCE AS A PREREQUISITE TO THE ISSUANCE OF A CERTIFICATE OF OCCUPANCY BY THE MUNICIPALITY.
17. MULCHING IS REQUIRED ON ALL SEEDED AREAS TO INSURE AGAINST EROSION BEFORE GRASS IS ESTABLISHED TO PROMOTE EARLIER VEGETATION COVER.
18. OFFSITE SEDIMENT DISTURBANCE MAY REQUIRE ADDITIONAL CONTROL MEASURES TO BE DETERMINED BY THE EROSION CONTROL INSPECTOR.
19. A COPY OF THE CERTIFIED SOIL EROSION AND SEDIMENT CONTROL PLAN MUST BE MAINTAINED ON THE PROJECT SITE DURING CONSTRUCTION.
20. THE SALEM SOIL CONSERVATION DISTRICT SHALL BE NOTIFIED 48 HOURS PRIOR TO ANY LAND DISTURBANCE.
21. ANY CONVEYANCE OF THIS PROJECT PRIOR TO ITS COMPLETION WILL TRANSFER FULL RESPONSIBILITY FOR COMPLIANCE WITH THE CERTIFIED PLAN TO ANY SUBSEQUENT OWNERS.
22. IMMEDIATELY AFTER THE COMPLETION OF STRIPPING AND STOCKPILING OF TOPSOIL, THE STOCKPILE MUST BE STABILIZED ACCORDING TO THE STANDARD FOR TEMPORARY VEGETATIVE COVER. STABILIZE TOPSOIL STOCKPILE WITH STRAW MULCH FOR PROTECTION IF THE SEASON DOES NOT PERMIT THE APPLICATION AND ESTABLISHMENT OF TEMPORARY SEEDING. ALL SOIL STOCKPILES ARE NOT TO BE LOCATED WITHIN FIFTY (50) FEET OF A FLOODPLAIN, SLOPE, ROADWAY OR DRAINAGE FACILITY AND THE BASE MUST BE PROTECTED WITH A SEDIMENT BARRIER.
23. ANY CHANGES TO THE SITE PLAN WILL REQUIRE THE SUBMISSION OF A REVISED SOIL EROSION AND SEDIMENT CONTROL PLAN TO THE SALEM SOIL CONSERVATION DISTRICT. THE REVISED PLAN MUST BE IN ACCORDANCE WITH THE CURRENT NEW JERSEY STANDARDS FOR SOIL EROSION AND SEDIMENT CONTROL.
24. METHODS FOR THE MANAGEMENT OF HIGH ACID PRODUCING SOILS SHALL BE IN ACCORDANCE WITH THE STANDARDS HIGH ACID PRODUCING SOILS ARE THOSE FOUND TO CONTAIN IRON SULFIDES OR HAVE A ph OF 4 OR LESS.
25. TEMPORARY AND PERMANENT SEEDING MEASURES MUST BE APPLIED ACCORDING TO THE NEW JERSEY STANDARDS, AND MULCHED WITH SALT HAY OR EQUIVALENT AND ANCHORED IN ACCORDANCE WITH THE NEW JERSEY STANDARDS (I.E. PEG AND TWINE, MULCH NETTING OR LIQUID MULCH BINDER).
26. MAXIMUM SIDE SLOPES OF ALL EXPOSED SURFACES SHALL NOT BE CONSTRUCTED STEEPER THAN 3:1 UNLESS OTHERWISE APPROVED BY THE DISTRICT.
27. DUST IS TO BE CONTROLLED BY AN APPROVED METHOD ACCORDING TO THE NEW JERSEY STANDARDS AND MAY INCLUDE WATERING WITH A SOLUTION OF CALCIUM CHLORIDE AND WATER.
28. ADJOINING PROPERTIES SHALL BE PROTECTED FROM EXCAVATING AND FILLING OPERATIONS ON THE PROPOSED SITE.
29. USE STAGED CONSTRUCTION METHODS TO MINIMIZE EXPOSED SURFACES, WHERE APPLICABLE.
30. ALL VEGETATIVE MATERIAL SHALL BE SELECTED IN ACCORDANCE WITH AMERICAN STANDARDS FOR NURSERY STOCK OF THE AMERICAN ASSOCIATION NURSERYMAN AND IN ACCORDANCE WITH THE NEW JERSEY STANDARDS.
31. NATURAL VEGETATION AND SPECIES SHALL BE RETAINED WHERE SPECIFIED ON THE LANDSCAPING PLAN.
32. THE SOIL EROSION INSPECTOR MAY REQUIRE ADDITIONAL SOIL EROSION MEASURES TO BE INSTALLED, AS DIRECTED BY THE DISTRICT INSPECTOR.

TEMPORARY SOIL STABILIZATION COVER

PRIOR TO HALTING CONSTRUCTION FOR PERIODS LONGER THAN 60 DAYS AND DURING THE OFF SEASON, THE CONTRACTOR SHALL STABILIZE WITH TEMPORARY VEGETATIVE ACCOMPLISHED BY THE FOLLOWING METHODS AND MATERIALS:

1) FERTILIZER SHALL BE APPLIED AT A RATE OF 500 LBS./ACRE OR 11 LBS./1,000 S.F. 10-20-10 OR EQUIVALENT. IF SEED IS DRILLED OVER BANDED FERTILIZED, THE RATE OF FERTILIZER MAY BE REDUCED BY 50%.
2) LIMESTONE SHALL BE APPLIED AT A RATE OF 2 TONS/ACRE OR 90 LBS./1,000 S.F. LIMESTONE EQUIVALENT TO 50% CALCIUM PLUS MAGNESIUM OXIDES SHALL BE USED.
3) LIME AND FERTILIZER SHALL BE WORKED INTO THE SOIL AS NEARLY AS PRACTICAL TO A DEPTH OF 4 INCHES WITH A DISC, SPRINGTOOTH NARROW, OR OTHER SUITABLE EQUIPMENT.
4) MULCHING SHALL BE APPLIED AFTER SEEDING. MULCH MATERIALS SHALL BE UNROTTED SMALL GRAIN STRAW, HAY FREE OF SEEDS, OR SALT MAY BE APPLIED AT THE RATE OF 1-1/2 TO 2 TONS PER ACRE (70 TO 90 LBS./1,000 S.F.), EXCEPT THAT WHERE A CRIMPER IS USED INSTEAD OF A LIQUID MULCH-BINDER (TACKIFYING OR ADHESIVE AGENT), THE RATE OF APPLICATION, SHALL BE DOUBLED. MULCHING SHALL BE SPREAD UNIFORMLY SO THAT APPROXIMATELY 85 % OF THE SOIL SURFACE WILL BE COVERED.
5) MULCH SHALL BE ANCHORED IMMEDIATELY AFTER PLACEMENT BY:

   LIQUID MULCH BINDERS - MAY BE USED TO ANCHOR SALT HAY OR STRAW MULCHES.

   A. APPLICATIONS SHOULD BE HEAVIER AT EDGES WHERE WIND CATCHES THE MULCH, IN VALLEYS AND AT CRESTS OF BANKS. REMAINDER OF AREA SHOULD BE UNIFORM IN APPEARANCE.

   B. USE ONE OF THE FOLLOWING:
      (1) EMULSIFIED ASPHALT - (SS-1, CSS-1, MS-2, CRS-1, AND CRS-2). APPLY 0.04 GAL./SQ. YD. OR 194 GAL./ACRE ON FLAT SLOPES LESS THAN 8 FEET HIGH. ON SLOPES 8 FEET OR MORE HIGH, USE 0.075 GAL./SQ. YD. PER 363 GAL./ACRE.
      (2) SYNTHETIC OR ORGANIC BINDERS SUCH AS CURASOL, DCA-70, PERTO-SET, AND TERRA-TACT MAY BE USED AT RATES RECOMMENDED BY THE MANUFACTURER TO ANCHOR MULCH MATERIAL.

   NOTE: ALL NAMES GIVEN ABOVE ARE REGISTERED TRADE NAMES. THIS DOES NOT CONSTITUTE A RECOMMENDATION OF THESE PRODUCTS TO THE EXCLUSION OF OTHER PRODUCTS.

   C. WOOD-FIBER OR PAPER-FIBER MULCH AT THE RATE OF 1,500 POUNDS PER ACRE MAY BE APPLIED BY A HYDROSEEDER. USE IS LIMITED TO FLATTER SLOPES AND DURING OPTIMUM SEEDING PERIODS IN SPRING AND FALL.
6) MULCH MAY BE USED IN PLACE OF TEMPORARY SEEDING IF SPREAD AT A RATE OF 2.0 TO 2.5 TONS PER ACRE AND ANCHORED AS

   CONDITIONS PERMIT. TOOL PENETRATING SHALL BE DONE ABOUT 3 TO 4 INCHES. ON SLOPING LAND, THE OPERATION SHALL BE DONE ON THE CONTOUR.
7) TEMPORARY SEED MIX SHALL BE PERENNIAL RYEGRASS WITH A RATE OF 40 LBS./ACRE OR 1 LB./ 1,000 S.F. SEED MIX SHALL BE DISCUSSED ABOVE. A MULCH ANCHORING TOOL MAY BE USED WHERE APPLIED UNIFORMLY. MULCH SHALL NOT BE INCLUDED IN THE TANK WITH THE SEED. EXCEPT FOR DRILLED, HYDROSEEDED OR CULTIVATED SEEDINGS. SEED SHALL BE INCORPORATED INTO THE SOIL TO A DEPTH OF 1/4 TO 1/2 INCH BY RAKING OR DRAGGING.
8) SEEDING MIX SHALL BE APPLIED BETWEEN 3/1 - 5/15 OR 8/15 - 10/1 WHEN REQUIRED. IF STABILIZATION IS REQUIRED OUTSIDE THESE SEEDING DATES, MULCH SHALL BE USED AS DEFINED UNDER ITEM NO. 6.

STANDARD FOR DUST CONTROL

THE FOLLOWING METHODS SHOULD BE CONSIDERED FOR CONTROLLING DUST:

MULCHES - SEE STANDARDS FOR STABILIZATION WITH MULCHES ONLY

VEGETATIVE COVER - SEE STANDARDS FOR: TEMPORARY VEGETATION COVER. (PERMANENT) VEGETATIVE COVER, AND PERMANENT STABILIZATION WITH SOD.
SPRAY-ON ADHESIVES- ON MINERAL SOILS (NOT EFFECTIVE ON MUCK SOILS). KEEP TRAFFIC OFF THESE AREAS.

	WATER DILUTION	TYPE OF NOZZLE	APPLY GALLONS/ACRE
ANIOIC ASPHALT EMULSION	7:1	COARSE SPRAY	1,200
LATEX EMULSION	12.5:1	FINE SPRAY	235
RESIN IN WATER	4:1	FINE SPRAY	300

TILLAGE- TO ROUGHEN SURFACE AND BRING CLODS TO THE SURFACE. THIS IS A TEMPORARY EMERGENCY MEASURE WHICH SHOULD BE USED BEFORE SOIL BLOWING STARTS. BEGIN PLOWING ON WINDWARD SLIDE OF SITE. CHISEL-TYPE PLOWS SPACED ABOUT 12 INCHES APART, AND SPRING-TOOTHED HARROWS ARE EXAMPLES OF EQUIPMENT WHICH MAY PRODUCE THE DESIRED EFFECT.

SPRINKLING- SITE IS SPRINKLED UNTIL THE SURFACE IS WET.

BARRIERS- SOLID BOARD FENCES, SNOW FENCES, BURLAP FENCES, CRATE WALLS, BALES OF HAY, AND SIMILAR MATERIAL CAN BE USED TO CONTROL AIR CURRENTS AND SOIL BLOWING.

CALCIUM CHLORIDE- SHALL BE IN THE FORM OF LOOSE, DRY GRANULES OR FLAKES FINE ENOUGH TO FEED THROUGH COMMONLY USED SPREADERS AT A RATE THAT WILL KEEP SURFACE MOIST BUT NOT TO CAUSE POLLUTION OR PLANT DAMAGE. IF USED ON STEEPER SLOPES, THEN USE OTHER PRACTICES TO PREVENT WASHING INTO STREAMS OR ACCUMULATION AROUND PLANTS.

STONE- COVER SURFACE WITH CRUSHED STONE OR COARSE GRAVEL.

LIQUID MULCH BINDERS - SEE TEMPORARY SOIL STABILIZATION COVER NOTES

STANDARD FOR STABILIZATION WITH MULCH ONLY

THIS PRACTICE IS APPLICABLE TO AREAS SUBJECT TO EROSION, WHERE THE SEASON AND OTHER CONDITIONS MAY NOT BE SUITABLE FOR GROWING AN EROSION-RESISTANT COVER OR WHERE STABILIZATION IS NEEDED FOR A SHORT PERIOD UNTIL MORE SUITABLE PROTECTION CAN BE APPLIED.

1. SITE PREPARATION
   A. GRADE AS NEEDED AND FEASIBLE TO PERMIT THE USE OF CONVENTIONAL EQUIPMENT FOR SEEDBED PREPARATION, SEEDING, MULCH APPLICATION, AND MULCH ANCHORING. ALL GRADING SHOULD BE DONE IN ACCORDANCE WITH STANDARDS FOR LAND GRADING, PG. 19-1
   B. INSTALL NEEDED EROSION CONTROL PRACTICES OR FACILITIES SUCH AS DIVERSIONS, GRADE STABILIZATION STRUCTURES, CHANNEL STABILIZATION MEASURES, SEDIMENT BASINS, AND WATERWAYS. SEE STANDARDS 11 THROUGH 42.
2. PROTECTIVE MATERIALS
   A. UNROTTED SMALL-GRAIN STRAW, OR SALT HAY AT 2.0 TO 2.5 TONS PER ACRE IS SPREAD UNIFORMLY AT 90 TO 115 POUNDS PER 1,000 SQUARE FEET AND ANCHORED WITH A MULCH ANCHORING TOOL, LIQUID MULCH BINDERS, OR NETTING TIE DOWN. OTHER SUITABLE MATERIALS MAY BE USED IF APPROVED BY THE SOIL CONSERVATION DISTRICT.
   B. ASPHALT EMULSION IS RECOMMENDED AT THE RATE OF 600 TO 1,200 GALLONS PER ACRE. THIS IS SUITABLE FOR A LIMITED PERIOD OF TIME WHERE TRAVEL BY PEOPLE, ANIMALS, OR MACHINES IS NOT A PROBLEM.
   C. SYNTHETIC OR ORGANIC SOIL STABILIZERS MAY BE USED UNDER SUITABLE CONDITIONS AND IN QUANTITIES AS RECOMMENDED BY THE MANUFACTURER.
   D. WOOD-FIBER OR PAPER-FIBER MULCH AT THE RATE OF 1,500 POUNDS PER ACRE (OR ACCORDING TO THE MANUFACTURER'S REQUIREMENTS) MAY BE APPLIED BY A HYDROSEEDER.
   E. MULCH NETTING, SUCH AS PAPER JUTE, EXCELSIOR, COTTON, OR PLASTIC, MAY BE USED.
   F. WOODCHIPS APPLIED UNIFORMLY TO A MINIMUM DEPTH OF 2 INCHES MAY BE USED. WOODCHIPS WILL NOT BE USED ON AREAS WHERE FLOWING WATER COULD WASH THEM INTO AN INLET AND PLUG IT.
   G. GRAVEL, CRUSHED STONE, OR SLAG AT THE RATE OF 9 CUBIC YARDS PER 1,000 SQ. FT. APPLIED UNIFORMLY TO A MINIMUM DEPTH OF 3 INCHES MAY BE USED. SIZE 2 OR 3 (ASTM C-33) IS RECOMMENDED.
3. MULCH ANCHORING - SHOULD BE ACCOMPLISHED IMMEDIATELY AFTER PLACEMENT OF HAY OR STRAW MULCH TO MINIMIZE LOSS BY WIND OR WATER. THIS MAY BE DONE BY ONE OF THE FOLLOWING METHODS, DEPENDING UPON THE SIZE OF THE AREA AND STEEPNESS OF SLOPES.
   A. PEG AND TWINE - DRIVE 8 TO 10 INCH WOODEN PEGS TO WITHIN 2 TO 3 INCHES OF THE SOIL SURFACE EVERY 4 FEET IN ALL DIRECTIONS. STAKES MAY BE DRIVEN BEFORE OR AFTER APPLYING MULCH. SECURE MULCH TO SOIL SURFACE BY STRETCHING TWINE BETWEEN PEGS IN A CRIS-CROSS AND A SQUARE PATTERN. SECURE TWINE AROUND EACH PEG WITH TWO OR MORE ROUND TURNS.
   B. MULCH NETTINGS - STAPLE PAPER, COTTON, OR PLASTIC NETTINGS OVER MULCH. USE A DEGRADABLE NETTING IN AREAS TO BE MOWED. NETTING IS USUALLY AVAILABLE IN ROLLS 4 FEET WIDE AND UP TO 300 FEET LONG.
   C. CRIMPER MULCH ANCHORING COULTER TOOL - A TRACTOR-DRAWN IMPLEMENT ESPECIALLY DESIGNED TO PUNCH AND ANCHOR MULCH INTO THE SOIL SURFACE. THIS PRACTICE AFFORDS MAXIMUM EROSION CONTROL, BUT ITS USE IS LIMITED TO THOSE SLOPES UPON WHICH THE TRACTOR CAN OPERATE SAFELY. SOIL PENETRATION SHOULD BE ABOUT 3 TO 4 INCHES. ON SLOPING LAND, THE OPERATION SHOULD BE ON THE CONTOUR.
   D. LIQUID MULCH-BINDERS
      1. APPLICATIONS SHOULD BE HEAVIER AT EDGES WHERE WIND CATCHES THE MULCH, IN VALLEYS, AND AT CRESTS OF BANKS. REMAINDER OF AREA SHOULD BE UNIFORM IN APPEARANCE.
      2. USE ONE OF THE FOLLOWING:
         A. EMULSIFIED ASPHALT - (SS-1, CSS-1, CMS-2, MS-2, RS-1, RS-2, CRS-1, AND CRS-2). APPLY 0.04 GAL./SQ./YD. OR 194 GAL./ACRE ON FLAT AREAS AND ON SLOPES LESS THAN 8 FEET OR MORE HIGH, USE 0.075 GAL./SQ. YD. OR 363 GAL./ACRE. THESE MATERIALS MAY BE DIFFICULT TO APPLY UNIFORMLY AND WILL DISCOLOR SURFACES.
         B. ORGANIC AND VEGETABLE BASED BINDERS - NATURALLY OCCURRING, POWDER BASED, HYDROPHILIC MATERIALS THAT MIXED WITH WATER FORMULATES A GEL AND WHEN APPLIED TO MULCH UNDER SATISFACTORY CURING CONDITIONS WILL FORM MEMBRANED NETWORKS OF INSOLUBLE POLYMERS. THE VEGETABLE GEL SHALL BE PHYSIOLOGICALLY HARMLESS AND NOT RESULT IN A PHYTOTOXIC EFFECT OR IMPEDE GROWTH OF TURFGRASS. VEGETABLE BASED GELS SHALL BE APPLIED AT RATES AND WEATHER CONDITIONS RECOMMENDED BY THE MANUFACTURER.
         C. SYNTHETIC BINDERS - HIGH POLYMER SYNTHETIC EMULSION, MISCIBLE WITH WATER WHEN DILUTED AND FOLLOWING APPLICATION TO MULCH, DRYING AND CURING SHALL NO LONGER BE SOLUBLE OR DISPERSIBLE IN WATER. IT SHALL BE APPLIED AT RATES AND WEATHER CONDITIONS RECOMMENDED BY THE MANUFACTURER AND REMAIN TACKY UNTIL GERMINATION OF GRASS.

PERMANENT VEGETATIVE COVER

PERMANENT VEGETATIVE COVER - IMMEDIATELY FOLLOWING THE COMPLETION OF CONSTRUCTION ACTIVITIES AT THE SITE, THE CONTRACTOR SHALL STABILIZE WITH PERMANENT VEGETATION COVER, ALL EXPOSED AND DISTURBED SOILS. PERMANENT VEGETATION COVER SHALL BE ACCOMPLISHED AS SPECIFIED BELOW:

1) TOP-SOILING - THE CONTRACTOR SHALL PREPARE AREAS TO BE STABILIZED WITH PERMANENT VEGETATION COVER BY APPLYING TOPSOIL TO A UNIFORM DEPTH OF 5 INCHES. TOPSOIL SHALL BE FRIABLE AND LOAMY AND OF GOOD QUALITY.
2) FERTILIZER SHALL BE APPLIED AT A RATE OF 500 LBS./ACRE OR 11 LBS./1,000 S.F. OF 10-20-10 OR EQUIVALENT OF 50% SLOW RELEASE NITROGEN MAY BE USED IN LIEU OF TOPDRESSING.
3) LIMESTONE SHALL BE APPLIED AT A RATE OF 3 TONS/ACRE OR 135 LBS./1,000 S.F. LIMESTONE EQUIVALENT OF 50% CALCIUM PLUS MAGNESIUM OXIDES SHALL BE USED.
4) LIME AND FERTILIZER SHALL BE WORKED INTO THE SOIL AS NEARLY AS PRACTICAL TO A DEPTH OF 4 INCHES UNTIL A REASONABLY UNIFORM, FINE SEEDBED IS PREPARED.
5) MULCHING SHALL BE APPLIED AFTER SEEDING. MULCH MATERIALS SHALL BE UNROTTED, SMALL GRAIN STRAW, HAY FREE OF SEEDS, OR SALT HAY MAY BE APPLIED AT A RATE OF 1.5 TO 2 TONS PER ACRE (70 TO 90 LBS. PER 1,000 S.F.), EXCEPT THAT WHERE A CRIMPER IS USED INSTEAD OF A LIQUID MULCH-BINDER (TACKIFYING OR ADHESIVE AGENT), THE RATE OF APPLICATION SHALL BE 3 TONS/ ACRE.
6) MULCHING SHALL BE ANCHORED IMMEDIATELY AFTER PLACEMENT BY THE FOLLOWING METHOD: LIQUID MULCH-BINDERS.
7) TOP DRESSING - AN APPLICATION OF FERTILIZER SUCH AS 10-10-10 OR EQUIVALENT AT 400 LBS./ACRE OR 10 LBS./1,000 S.F. BETWEEN SEPTEMBER AND OCTOBER 15 SHALL BE REQUIRED FOR SPRING SEEDING UNLESS A SLOW RELEASE NITROGEN IS USED AS STATED ABOVE.
8) PERMANENT SEED MIX SHALL BE USED AS FOLLOWS:

SEED MIXTURE	LB./ACRE	LBS./1,000 S.F.	SEED MIXTURE PLANTING DATES
HARD FESCUE	120	2.7	2/1 TO 4/30 **O
CREEPING FESCUE	30	.7	5/1 TO 8/14 **A
PERENNIAL RYEGRASS	10	0.25	8/15 TO 11/30 **O

**O = OPTIMAL PLANTING PERIOD
**A = ACCEPTABLE PLANTING PERIOD

9) SEED MIX SHALL BE INCORPORATED INTO THE SOIL, TO A DEPTH OF 1/4 TO 1/2 INCH, BY RAKING OR DRAGGING.
10) SEED MIX SHALL CONTAIN NO MORE THAN 10 PERCENT KENTUCKY BLUEGRASS.

STANDARD FOR TOPSOILING:

DEFINITION
Topsoiling entails the distribution of suitable quality soil on areas to be vegetated.
PURPOSE
To improve the soil medium for plant establishment and maintenance.
WATER QUALITY ENHANCEMENT
Growth and establishment of a vigorous vegetative cover is facilitated by topsoil, preventing soil loss by wind and rain offsite and into streams and other stormwater conveyances.
WHERE APPLICABLE
Topsoil shall be used where soils are to be disturbed and will be revegetated.
METHODS AND MATERIALS
1.Materials
A.Topsoil should be friable1, loamy2, free of debris, objectionable weeds and stones, and contain no toxic substance or adverse chemical or physical condition that may be harmful to plant growth. Soluble salts should not be excessive (conductivity less than 0.5 millimhos per centimeter. More than 0.5 millimhos may desiccate seedlings and adversely impact growth). Imported topsoil shall have a minimum organic matter content of 2.75 percent. Organic matter content may be raised by additives.
B. Topsoil substitute is a soil material which may have been amended with sand, silt, clay, organic matter, fertilizer or lime and has the appearance of topsoil. Topsoil substitutes may be utilized on sites with insufficient topsoil for establishing permanent vegetation. All topsoil substitute materials shall meet the requirements of topsoil noted above. Soil tests shall be performed to determine the components of sand, silt, clay, organic matter, soluble salts and pH level.
2.Stripping and Stockpiling
A.Field exploration should be made to determine whether quantity and or quality of surface soil justifies stripping.
B. Stripping shall be confined to the immediate construction area.
C. Where feasible, lime may be applied before stripping at a rate determined by soil tests to bring the soil pH to approximately 6.5.
D. A 4-6 inch stripping depth is common, but may vary depending on the particular soil.
E. Stockpiles of topsoil should be situated so as not to obstruct natural drainage or cause off-site environmental damage.
F. Stockpiles should be vegetated in accordance with standards previously described herein; see standards for Permanent (pg. 4-1) or Temporary (pg.7-1) Vegetative Cover for Soil Stabilization. Weeds should not be allowed to grow on stockpiles.
3.Site Preparation
A.Grade at the onset of the optimal seeding period so as to minimize the duration and area of exposure of disturbed soil to erosion. Immediately proceed to establish vegetative cover in accordance with the specified seed mixture. Time is of the essence
B. Grade as needed and feasible to permit the use of conventional equipment for seedbed preparation, seeding, mulch application and anchoring, and maintenance.
See the Standard for Land Grading, pg. 19-1.
C. As guidance for ideal conditions, subsoil should be tested for lime requirement. Limestone, if needed, should be applied to bring soil to a pH of approximately 6.5 and incorporated into the soil as nearly as practical to a depth of 4 inches.
D. Prior to topsoiling, the subsoil shall be in compliance with the Standard for Land Grading, pg. 19-1.
E. Employ needed erosion control practices such as diversions, grade stabilization structures, channel stabilization measures, sedimentation basins, and waterways. See Standards 11 through 42.
4.Applying Topsoil
A.Topsoil should be handled only when it is dry enough to work without damaging soil structure; i.e., less than field capacity (see glossary).
B. A uniform application to an average depth of 5.0 inches, minimum of 4 inches, firmed in place is required. Alternative depths may be considered where special regulatory and/or industry design standards are appropriate such as on golf courses, sports fields, landfill capping, etc.. Soils with a pH of 4.0 or less or containing iron sulfide shall be covered with a minimum depth of 12 inches of soil having a pH of 5.0 or more, in accordance with the Standard for Management of High Acid Producing Soil (pg. 1-1).
C. Pursuant to the requirements in Section 7 of the Standard for Permanent Vegetative Stabilization, the contractor is responsible to ensure that permanent vegetative cover becomes established on at least 80% of the soils to be stabilized with vegetation. Failure to achieve the minimum coverage may require additional work to be performed by the contractor to include some or all of the following: supplemental seeding, re-application of lime and fertilizers, and/or the addition of organic matter (i.e. compost) as a top dressing. Such additional measures shall be based on soil tests such as those offered by Rutgers Cooperative Extension Service or other approved laboratory facilities qualified to test soil samples for agronomic properties.

CONSTRUCTION SEQUENCE:

1) INSTALL ALL SOIL EROSION MEASURES I.E. SILT FENCE, INLET PROTECTION & CONSTRUCTION ENTRANCE.	[7 DAYS]
2) ROUGH GRADE SITE. STRIP TOPSOIL FIRST AND PLACE IN THE DESIGNATED AREA ON THE SOIL EROSION PLAN, THEN ALL SUB-TOPSOIL EXCAVATION SHALL BE PLACED IN THE SEPARATE AREA DESIGNATED ON THE SOIL EROSION PLAN.	[14-21 DAYS]
3) CONSTRUCT PAVING AND CURB.	[15-30 DAYS]
4) CONSTRUCT SITE IMPROVEMENTS.	[6 MONTHS]
5) COMPLETE ANY REMAINING GRADING AND LANDSCAPE SITE. APPLY 5" OF TOPSOIL AND PERMANENT STABILIZATION. UPON COMPLETE SITE STABILIZATION, THE BASIN FILTER FABRIC AND ANY ACCUMULATED SEDIMENT SHOULD BE REMOVED.	[14 DAYS]
6) AFTER COMPLETION OF SITE WORK AND ACCEPTANCE FROM THE TOWNSHIP, REMOVE SOIL EROSION CONTROL MEASURES.	[7 DAYS]

Inlet Protection Details

Note: The diagram below conforms to the 2014 revised Standards for SESC in NJ

Silt Sack or approved equal

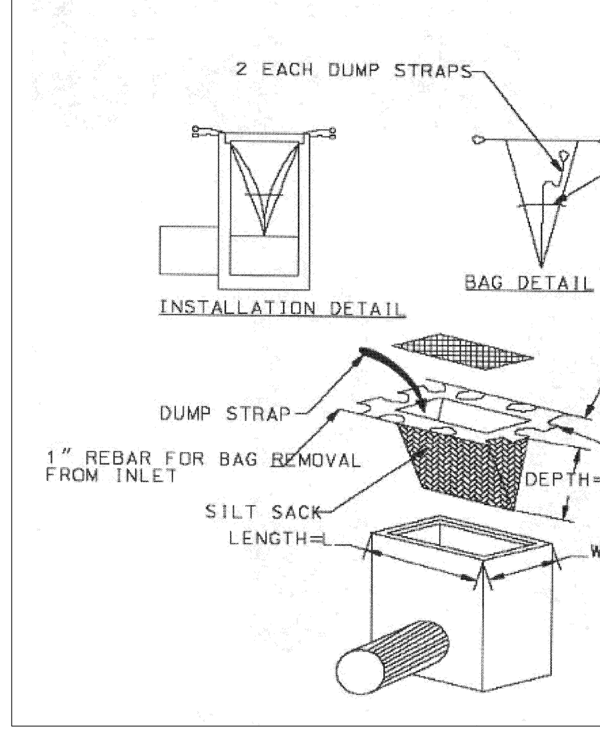

Standards for Soil Erosion and Sediment Control in New Jersey — *January 2014*

Detail 14-4 Sediment Control Bag for Dewatering

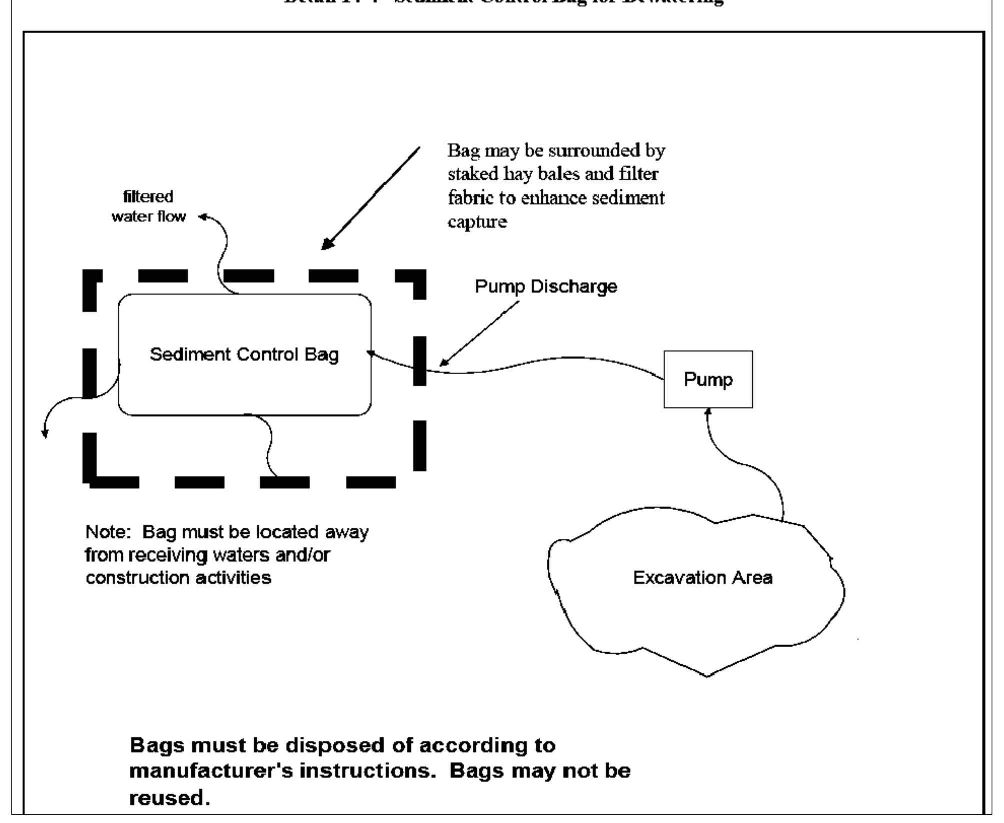

SOIL DE-COMPACTION AND TESTING REQUIREMENTS

SOIL COMPACTION TESTING REQUIREMENTS
1. Subgrade soils prior to the application of topsoil (see permanent seeding and stabilization notes for topsoil requirements) shall be free of excessive compaction to a depth of 6.0 inches to enhance the establishment of permanent vegetative cover.
2. Areas of the site which are subject to compaction testing and/or mitigation are graphically denoted on the certified soil erosion control plan.
3. Compaction testing locations are denoted on the plan. A copy of the plan or portion of the plan shall be used to mark locations of tests, and attached to the compaction remediation form, available from the local soil conservation district. This form must be filled out and submitted prior to receiving a certificate of compliance from the district.
4. In the event that testing indicates compaction in excess of the maximum thresholds indicated for the simplified testing methods (see details below), the contractor/owner shall have the option to perform either (1) compaction mitigation over the entire mitigation area denoted on the plan (excluding exempt areas), or (2) perform additional, more detailed testing to establish the limits of excessive compaction whereupon only the excessively compacted areas would require compaction mitigation. Additional detailed testing shall be performed by a trained, licensed professional.

COMPACTION TESTING METHODS
A. Probing Wire Test (see detail)
B. Hand-held Penetrometer Test (see detail)
C .Tube Bulk Density Test (licensed professional engineer required
D. Nuclear Density Test (licensed professional engineer required)
Note: Additional testing methods which conform to ASTM standards and specifications, and which produce a dry weight, soil bulk density measurement may be allowed subject to District approval.
Soil compaction testing is not required if/when subsoil compaction remediation (scarification/tillage (6" minimum depth) or similar) is proposed as part of the sequence of construction.
PROCEDURES FOR SOIL COMPACTION MITIGATION
Procedures shall be used to mitigate excessive soil compaction prior to placement of topsoil and establishment of permanent vegetative cover.
Restoration of compacted soils shall be through deep scarification/tillage (6" minimum depth) where there is no danger to underground utilities (cables, irrigation systems, etc.). In the alternative, another method as specified by a New Jersey Licensed Professional Engineer maybe substituted subject to District Approval.

Simplified Testing Methods

Probing Wire Test- 15.5 ga steel wire (survey flag)

Note: soil should be moist but not saturated. Do not test when soil is excessively dry or subject to freezing temperatures. Slow, steady downward pressure used to advance the wire.

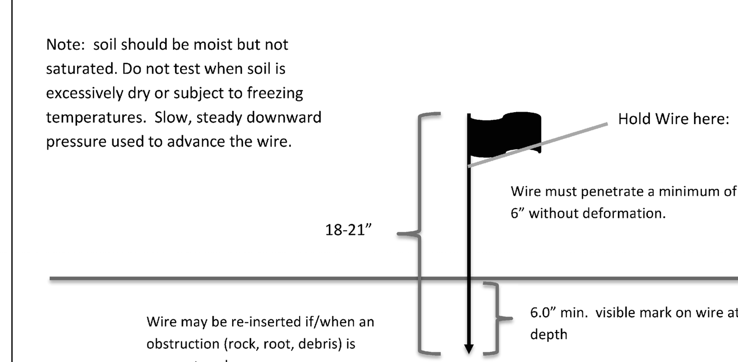

Wire may be re-inserted if/when an obstruction (rock, root, debris) is encountered.

Handheld Soil Penetrometer Test

Note: soil should be moist but not saturated. Do not test when soil is excessively dry or subject to freezing temperatures. Slow, steady downward pressure used to advance the probe. Probe must penetrate at least 6" with less than 300 psi reading on the gage.

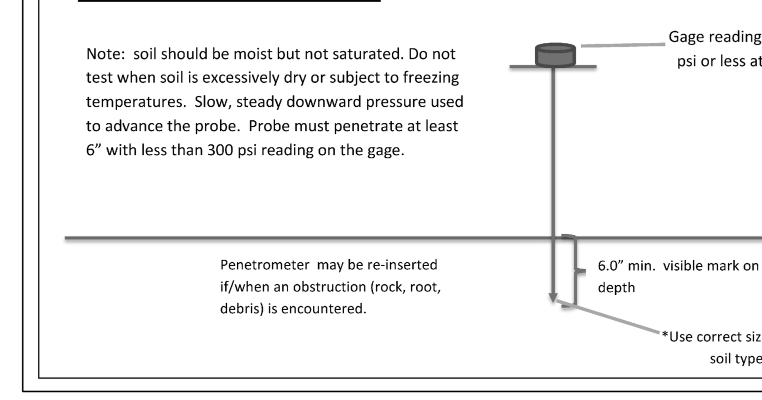

Penetrometer may be re-inserted if/when an obstruction (rock, root, debris) is encountered.

STANDARD FOR LAND GRADING:

Definition
Reshaping the ground surface by grading to planned elevations which are determined by topographic survey and layout.
Purpose
The practice is for one or more of the following: Provide more suitable sites for land development; improve surface drainage and control erosion.
Conditions Where Practice Applies
This practice is applicable where grading to planned elevations is practical and it is determined that grading is needed. Grading that involves the disturbance of vegetation over large areas shall be avoided. It may be necessary to provide for temporary stabilization of large areas.
Water Quality Enhancement
Proper grading of disturbed sites will protect against soil loss from erosion, enhance establishment of permanent vegetative cover and help to properly manage stormwater runoff all of which will reduce off site discharge of pollutants.
Planning Criteria
The grading plan and installation shall be based upon adequate topographic surveys and investigations. The plan is to show the location, slope, cut, fill and finish elevation of the surfaces to be graded. The plan should also include auxiliary practices for safe disposal of runoff water, slope stabilization, erosion control and drainage. Facilities such as waterways, ditches, diversions, grade stabilization structures, retaining walls and subsurface drains should be included where necessary.
Erosion control measures shall be designed and installed in accordance with the applicable standard contained herein.
The development and establishment of the plan shall include the following:
1. The cut face of earth excavations and fills shall be no steeper than the safe angle of repose for the materials encountered and flat enough for proper maintenance.
2. The permanently exposed faces of earth cuts and fills shall be vegetated or otherwise protected from erosion.
3. Provisions shall be made to safely conduct surface water to storm drains or suitable water courses and to prevent surface runoff from damaging cut faces and fill slopes.
4. Subsurface drainage is to be provided in areas having a high water table, to intercept seepage that would adversely affect slope stability, building foundations or create undesirable wetness. See Standard for Subsurface Drainage, pg. 32-1.
5. Adjoining property shall be protected from excavation and filling operations.
6. Fill shall not be placed adjacent to the bank of a stream or channel, unless provisions are made to protect the hydraulic, biological, aesthetic and other environmental functions of the stream.

Soil Management and Preparation
Subgrade soils prior to the application of topsoil shall be free of excessive compaction to a depth of 6.0 inches to enhance the establishment of permanent vegetative cover.
This section of this Standard addresses the potential for excessive soil compaction in light of the intended land use, testing for excessive soil compaction where permanent vegetation is to be established and mitigation of excessive soil compaction when appropriate.
Due to use or setting, certain disturbed areas will not require compaction remediation including, but not limited to the following:
1. Within 20 feet of building foundations with basements, 12 feet from slab or crawl space construction.
2. Where soils or gravel surfaces will be required to support post-construction vehicular traffic loads such as roads, parking lots and driveways (including gravel surfaces), bicycle paths or pedestrian walkways (sidewalks etc)
3. Airports, railways or other transportation facilities
4. Areas requiring industry or government specified soil designs, including golf courses, landfills, wetland restoration, septic disposal fields, wet/lined ponds, etc.
5. Areas governed or regulated by other local, state or federal regulations which dictate soil conditions
6. Brownfields (capped uses), urban redevelopment areas, , in-fill areas, , recycling yards, junk yards, quarries and
7. Slopes determined to be inappropriate for safe operation of equipment
8. Portions of a site where no heavy equipment travel or other disturbance has taken place
9. Areas receiving temporary vegetative stabilization in accordance with the Standard.
10. Where the area available for remediation practices is 500 square feet or less in size.
11. Locations containing shallow (close to the surface) bedrock conditions.

Areas of the site which are subject to compaction testing and/or mitigation shall be graphically denoted on the certified soil erosion control plan.
Soil compaction remediation or testing to prove remediation is not necessary will be required in areas where permanent vegetation is to be established that are not otherwise exempted above. Testing method shall be selected, and soil compaction testing shall be performed by, the contractor or other project owner's representative (e.g. engineer). A minimum of two (2) tests shall be performed for projects with an overall limit of disturbance of up to one (1) acre and at a rate of two (2) tests per acre of the overall limit of disturbance for larger areas which shall be evenly distributed over the area of disturbance subject to testing. Tests shall be performed in areas representative of the construction activity prevailing in the area. In the event this testing indicates compaction in excess of the maximum thresholds indicated for the testing method, the contractor/owner shall have the option to perform compaction mitigation over the entire disturbed area (excluding exempt areas) or to perform additional testing to establish the limits of excessive compaction whereupon only the excessively compacted areas would require compaction mitigation.
Soil compaction testing is not required if/when subsoil compaction remediation (scarification/tillage (6" minimum depth) or similar) is proposed as part of the sequence of construction.

Soil Test Method Options
1. Probing Wire Test Method

This test shall be conducted with a firm wire (15-1/2 gauge steel wire - e.g. survey marker flag, straight wire stock, etc.), 18 to 21 inches in length, with 6" inches from one end visibly marked on the wire. Conduct wire flag test by holding the wire flag near the flag end and push it vertically into the soil at several different locations in the field to the lesser of a 6 inch depth or the depth at which it bends due to resistance in the soil. Record the depth at which it bends due to resistance in the soil. The wire should penetrate without bending or deforming at least 6" into the ground by hand, without the use of tools. If penetration fails and an obstruction is suspected (rocks, root, debris, etc.) the test can be repeated in the same general area. If the test is successful the soil is not excessively compacted. If the wire is difficult to insert (wire bends or deforms prior to reaching 6 inches in depth) the soil may be excessively compacted and compaction mitigation or further testing via method 3 or 4 below is required, the choice of which is at the contractor/owner's discretion.
2. Handheld Soil Penetrometer Test Method

This test shall be conducted based on the Standard Operation Procedure (SOP) #RCE2010-001, prepared by the Rutgers Cooperative Extension, Implemented June 1, 2010, last revised February 28, 2011. A result of less than or equal to 300 psi shall be considered passing. If the result is greater than 300 psi the soil may be excessively compacted and compaction mitigation or further testing via method 3 or 4 below is required, the choice of which is at the contractor/owner's discretion.
3. Tube Bulk Density Test Method

This test shall be certified by a New Jersey Licensed Professional Engineer utilizing only undisturbed samples (reconstitution of the sample not permitted) collected utilizing the procedure for Soil Bulk Density Tests as described in the USDA NRCS Soil Quality Test Kit Guide, Section 1-4, July 2001. When the texture of the soil to be tested is a sand or loamy sand and lack of soil cohesion or the presence of large amounts of coarse fragments, roots or worm channels prevent the taking of undisturbed samples, this test shall not be used.
Where the results of replicate tests differ by more than ten percent (10%), the samples shall be examined for the following defects:
i. Cracks, worm channels, large root channels or poor soil tube contact within the samples;
ii. Large pieces of gravel, roots or other foreign objects
iii. Smearing or compaction of the upper or lower surface of the samples
If any of the defects described in 3 (i-iii) above are found, the defective core(s) shall be discarded
and the test repeated using a new replicate sample for each defective replicate sample. The bulk density (defined as the weight of dry soil per volume) results shall be compared with the Maximum Dry Bulk Densities in Table 19-1. A result of less than or equal to the applicable maximum bulk density shall be considered passing. If the result is greater than the maximum bulk density the soil shall be considered excessively compacted and compaction mitigation is required.
4. Nuclear Density Test Method

This test shall be certified by a New Jersey Licensed Professional Engineer and conducted by a nuclear gauge certified inspector pursuant to ASTM D6938 . The bulk density measurement results shall be compared with the Maximum Dry Bulk Densities in Table 19-1. A result of less than or equal to the applicable maximum bulk density shall be considered passing. If the result is greater than the maximum bulk density the soil shall be considered excessively compacted and compaction mitigation is required.

Table 19-1 - Maximum Dry Bulk Densities (grams/cubic centimeter) by soil type

Soil Type/Texture	Bulk Density (g/cc)
Coarse, Medium and Fine Sands and Loamy Sands	1.80
Very Fine Sand and Loamy Very Fine Sand	1.77
Sandy Loam	1.75
Loam, Sandy Clay Loam	1.70
Clay Loam	1.65
Sandy Clay	1.60
Silt, Silt Loam	1.55
Silty Clay Loam	1.50
Silty Clay 1.45 Clay	1.40

Source: USDA Natural Resource Conservation Service, Soil Quality Information Sheet, Soil Quality Resource Concerns: Compaction, April 1996

5.Additional testing methods which comform to ASTM standards and specificaitons, and which produce a dry weight, soil bulk density measurement may be allowed subject to District approval.

Procedures for Soil Compaction Mitigation
If subgrade soils are determined to be excessively compacted by testing, as identified above, procedures shall be used to mitigate excessive soil compaction prior to placement of topsoil and establishment of permanent vegetative cover. Restoration of compacted soils shall be through deep scarification/tillage (6" minimum depth) where there is no danger to underground utilities (cables, irrigation systems, etc.) or in the alternative, another method as specified by a New Jersey Licensed Professional Engineer.
Installation Requirements
Timber, logs, brush, rubbish, rocks, stumps and vegetative matter which will interfere with the grading operation or affect the planned stability or fill areas shall be removed and disposed of according to the plan.
Topsoil is to be stripped and stockpiled in amounts necessary to complete finish grading of all exposed areas requiring topsoil. See Standard for Topsoiling, pg. 8-1.
Fill material is to be free of brush, rubbish, timber, logs, vegetative matter and stumps in amounts that will be detrimental to constructing stable fills.
All structural fills shall be compacted as determined by structural engineering requirements for their intended purpose and as required to reduce slipping, erosion or excessive saturation.
All disturbed areas shall be left with a neat and finished appearance and shall be protected from erosion. See Standards for Permanent Vegetative Cover for Soil Stabilization, pg. 4-1.
Trees to be retained shall be protected if necessary in accordance with the Standard for Tree Protection During Construction, pg. 9-1.

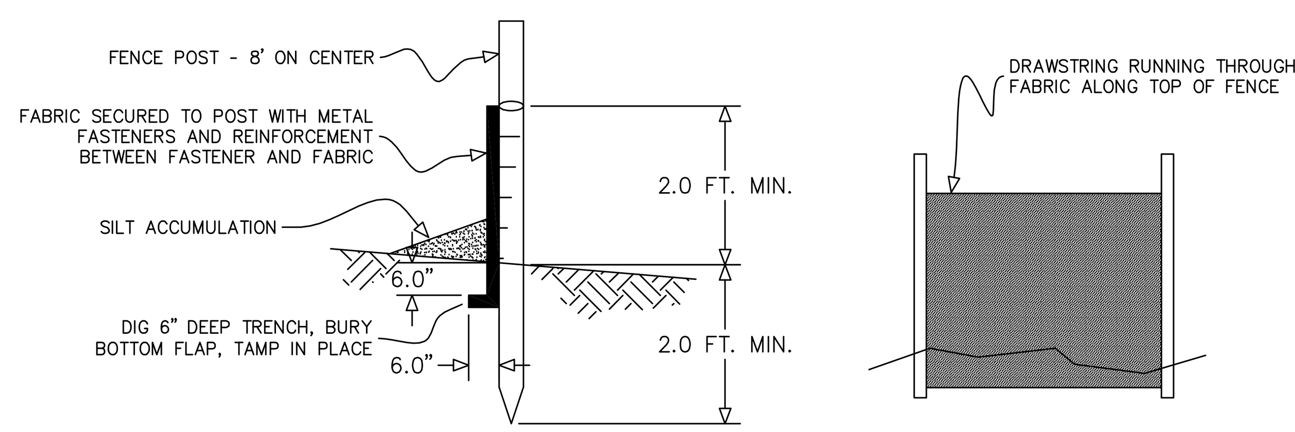

SILT FENCE
N.T.S.

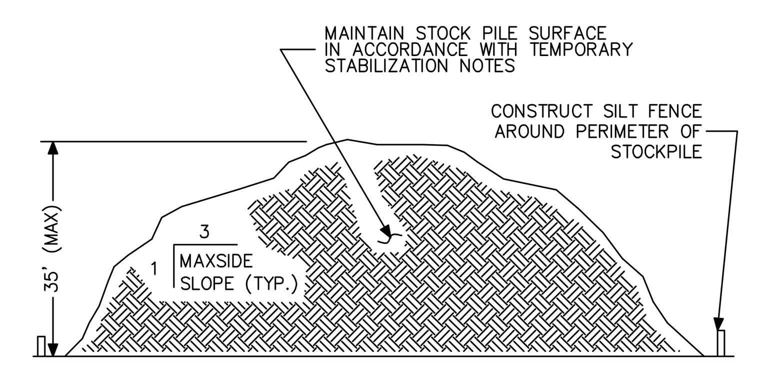

TEMPORARY STOCKPILE
N.T.S.

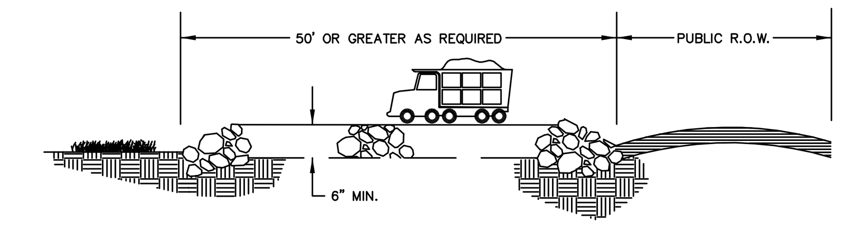

PROFILE (N.T.S.)

PROVIDE APPROPRIATE TRANSITION BETWEEN STABILIZED CONSTRUCTION ENTRANCE AND PUBLIC R.O.W.

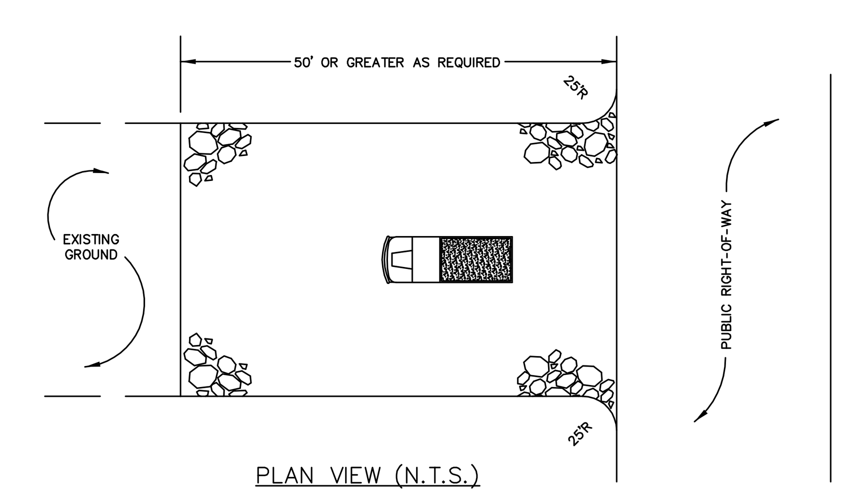

PLAN VIEW (N.T.S.)

STABILIZED CONSTRUCTION ENTRANCE
SCALE: N.T.S.

CONTRACTOR'S RESPONSIBILITY

LOCATIONS OF UTILITIES SHOWN ON THIS PLAN AREA NOT NECESSARILY COMPLETE. THE CONTRACTOR SHALL NOTIFY ALL UTILITY COMPANIES OPERATING WITHIN THE CONSTRUCTION AREA AND AT HIS OWN EXPENSE VERIFY THE LOCATION, SIZE, TYPE AND ELEVATION OF ANY UTILITIES PRIOR TO CONSTRUCTION. IT IS THE RESPONSIBILITY OF THE OWNER AND/OR CONTRACTOR TO CALL 1-800-272-1000 FOR FIELD LOCATION OF UNDERGROUND UTILITIES PRIOR TO CONSTRUCTION.

SITE SAFETY NOTE:

THE CONTRACTOR IS TO DESIGNATE AN INDIVIDUAL RESPONSIBLE FOR CONSTRUCTION SITE SAFETY DURING THE COURSE OF SITE IMPROVEMENTS PURSUANT TO N.J.A.C. 5:23-2.21(c) OF THE NJ UNIFORM CONSTRUCTION CODE AND CFR 1926.32(f) (OSHA COMPETENT PERSON).

JAMES A. CLANCY
Professional Engineer & Land Surveyor — NJ LIC. # 33998
Professional Planner — NJ LIC. # 04200
Professional Engineer — DE LIC. # 12078
Professional Engineer — PA LIC. # 42340
Professional Land Surveyor — PA LIC. # 61357
2/12/20
Date

H. C. E. & S., LLC
CONSULTING ENGINEERS
Engineers • Land Surveyors • Planners
601 Asbury Avenue
National Park, NJ 08063
Phone: (856) 853-7306
Fax: (856) 853-7381
CERTIFICATE OF AUTHORIZATION NO. 24GA27943500

SOIL EROSION DETAILS & NOTES
FOR
542, 546 & 546.5 NORTH BROADWAY
LOT(S): 2 & 3
BLOCK: 117, PLATE: 1
TOWNSHIP OF PENNSVILLE
SALEM COUNTY, NEW JERSEY

CLIENT: ARCR PROPERTIES, LLC		
DATE: 9/27/19	**DRAWN:** RAS	**CHECKED:** JAC
JOB#: C-25319	**SCALE:** NONE	**SHEET:** 6 OF 8

– REVISIONS –

ISSUE	DATE	DESCRIPTION

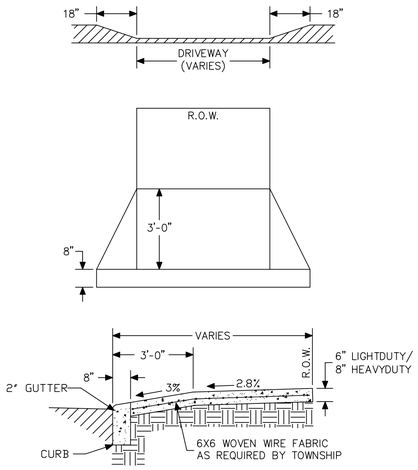

DRIVEWAY APRON DETAIL

N.T.S

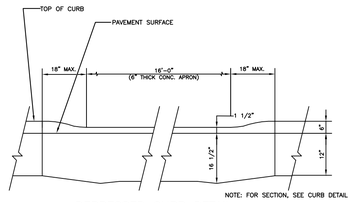

DEPRESSED CURB DETAIL

N.T.S.

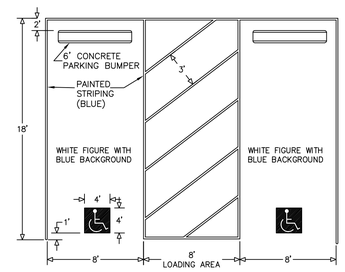

HANDICAP PARKING

N.T.S.

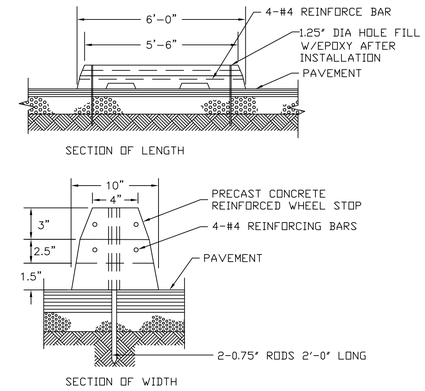

CONCRETE WHEEL STOP

N.T.S.

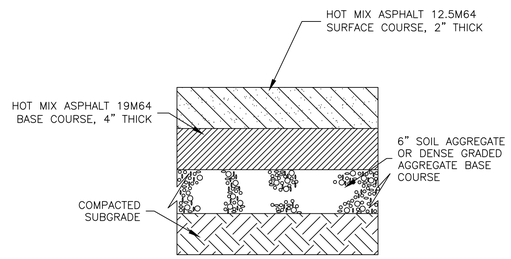

ASPHALT PAVING DETAIL

N.T.S.

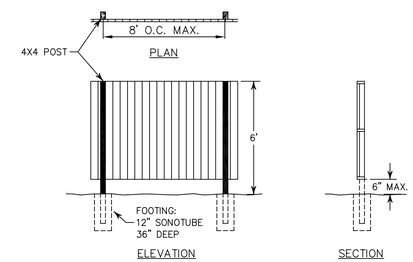

NOTE: CONCRETE SHALL BE 4000 PSI @ 28 DAYS

6' VINYL STOCKADE FENCE

SCALE: N.T.S.

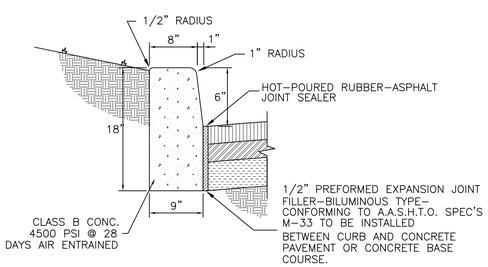

NOTE:
1. TRANSVERSE JOINTS 1/2" WIDE SHALL BE INSTALLED IN CURB 20'-0" APART & SHALL BE FILLED WITH PREFORMED BITUMINOUS-IMPREGNATED FIBER JOINT FILLER, COMPLYING WITH THE REQUIREMENTS OF A.A.S.H.O. SPEC M-213, RECESSED 1/4" IN FROM THE FRONT FACE AND TOP OF CURB.
2. HALF-DEPTH CONTRACTION JOINTS SHALL BE PROVIDED EVERY 10 FEET.
3. WIDTH OF JOINT FILLER STRIP EQUAL TO THE THICKNESS OF THE PAVEMENT LESS 1/2".

9"x18" CONCRETE VERTICAL
CURB DETAIL

N.T.S.

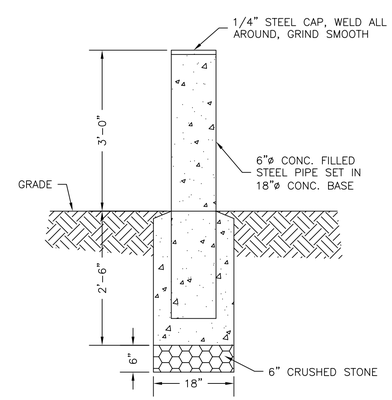

STEEL & CONCRETE BOLLARD

SCALE: N.T.S.

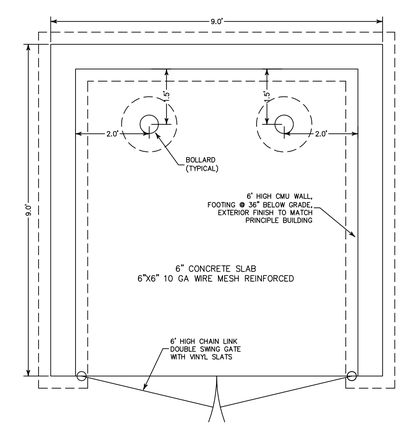

NOTE: CONCRETE SHALL BE 4000 PSI @ 28 DAYS

TRASH ENCLOSURE DETAIL

[SCALE: N.T.S.]

JAMES A. CLANCY

Professional Engineer & Land Surveyor	NJ LIC. # 33996	2/12/20
Professional Planner	NJ LIC. # 04200	Date
Professional Engineer	DE LIC. # 12078	
Professional Engineer	PA LIC. # 22340	
Professional Land Surveyor	PA LIC. # 61357	

H. C. E. & S., LLC
CONSULTING ENGINEERS
Engineers • Land Surveyors • Planners
601 Asbury Avenue
National Park, NJ 08063
Phone: (856) 853-7306
Fax: (856) 853-7381
CERTIFICATE OF AUTHORIZATION NO. 24GA27943500

GENERAL DETAILS
FOR
542, 546 & 546.5 NORTH BROADWAY
LOT(S): 2 & 3
BLOCK: 117, PLATE: 1
TOWNSHIP OF PENNSVILLE
SALEM COUNTY, NEW JERSEY

CLIENT: ARCR PROPERTIES, LLC		
DATE: 9/27/19	DRAWN: RAS	CHECKED: JAC
JOB #: C-25319	SCALE: NONE	SHEET: 7 OF 8

- REVISIONS -

ISSUE	DATE	DESCRIPTION

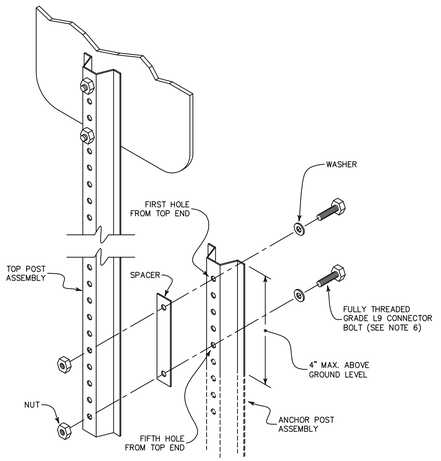

NOTES:

1. DRIVE ANCHOR POST ASSEMBLY TO WITHIN APPROXIMATELY 12 INCHES ABOVE GROUND LEVEL PLACE BOLT AND WASHER IN FIRST AND FIFTH HOLES FROM THE TOP END, AND SECURELY TIGHTEN BOLTS ONTO THREADED SPACER.
2. DRIVE ANCHOR POST ASSEMBLY TO WITHIN A MAXIMUM OF 4 INCHES ABOVE GROUND LEVEL.
3. DIG OUT AROUND BACK OF ANCHOR POST ASSEMBLY TO ALLOW ROOM FOR TOP POST TO BE ATTACHED.
4. NEST TOP POST ASSEMBLY ONTO PROTRUDING ANCHOR POST ASSEMBLY BOLTS, THROUGH THE FIRST AND FIFTH HOLES FROM THE BOTTOM OF THE TOP POST.
5. PLACE AND TIGHTEN A SELF-LOCKING FLANGE NUT ON EACH BOLT. WHEN INSTALLATION IS COMPLETE, TOP OF GROUND POST SHALL NOT EXCEED 4 INCHES ABOVE GROUND LEVEL.
6. SIZE OF CONNECTOR BOLT FOR TYPE 1-5/16" X 1-1/2" SIZE OF CONNECTOR BOLT FOR TYPE 2-5/16" X 2"
7. THE CONNECTOR BOLTS AND SPACERS SHALL BE FULLY THREADED. EACH CONNECTOR BOLT AND NUT SHALL BE CLEARLY STAMPED WITH MANUFACTURER'S IDENTIFYING MARK.

ANCHOR POST ASSEMBLY & SIGN SUPPORT

[N.T.S.]

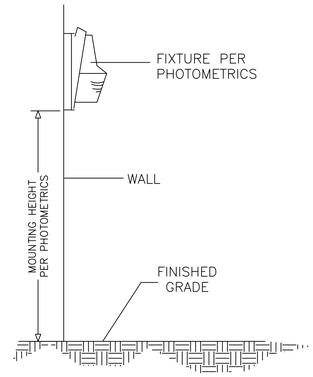

WALL MOUNT FIXTURE

N.T.S.

MAX. POLE HEIGHT	LENGTH "L"	DIAMETER "W"
10'-0"	4'-0"	18"
15'-0"	4'-0"	18"
20'-0"	5'-0"	24"
30'-0"	6'-0"	24"

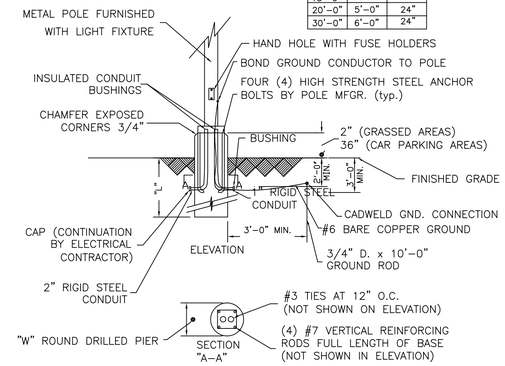

CONCRETE LIGHTING STANDARD FOUNDATION DETAIL

N.T.S.

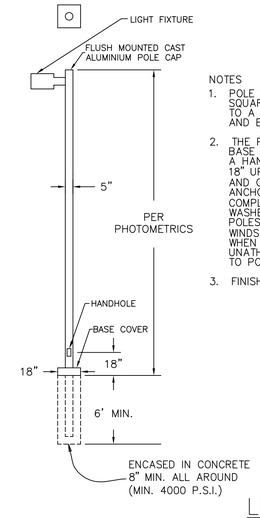

NOTES

1. POLE SHALL BE CONSTRUCTED OF A SQUARE STEEL TUBE AND WELDED TO A STEEL BASE AT BOTH TOP AND BOTTOM OF BASE CASTING.
2. THE POLE SHALL BE SECURED TO BASE BY STAINLESS STEEL SCREWS. A HAND HOLE SHALL BE PROVIDED 18" UP FROM BASE WITH A COVER AND GROUND LUG. FOUR (4) GALVINIZED ANCHOR BOLTS SHALL BE PROVIDED COMPLETE WITH (8) NUTS, (8) FLAT WASHERS, AND A PRESSWOOD TEMPLATE. POLES SHALL WITHSTAND STEADY WINDS UP TO 80 MPH (104 MPH GUSTING) WHEN LUMINAIRES ARE MOUNTED. ANY UNATHORIZED ACCESSORIES SECURED TO POLE SHALL VOID GUARANTEE.
3. FINISH: BONZE ENAMEL

LIGHT POLE

N.T.S.

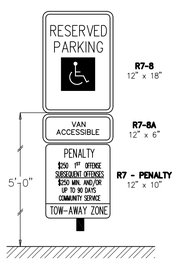

R 7-8 SIGN

N.T.S.

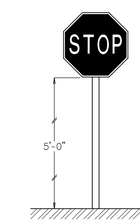

R1-1 30"x30" STOP SIGN

N.T.S.

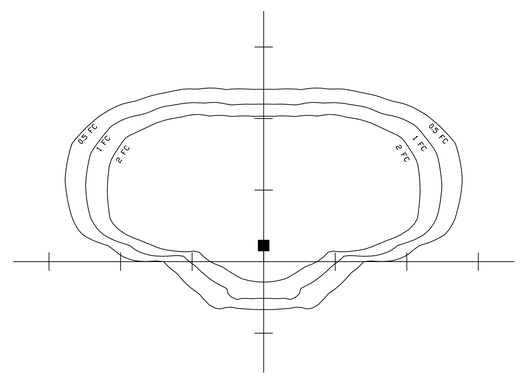

IESNA:LM-63-2002
[TEST] ISF 34062P22
[TESTDATE] 3/21/2017
[ISSUEDATE] 11/9/2017
[TESTLAB] SCALED PHOTOMETRY
[TESTMETHOD]
[MANUFAC] Lithonia Lighting
[LUMCAT] DSX2 LED P8 30K T3S MVOLT HS
[LUMINAIRE] DSX2 LED P8 30K T3S MVOLT with houseside shield
[LAMPCAT]
[LAMP] LED
[BALLAST] LED DRIVER
[BALLASTCAT]
[DISTRIBUTION] TYPE III, SHORT, BUG RATING: B3 - U0 - G5
[_TOTALLUMINAIRELUMENS] 37915.4
[_LAMPPOSITION] 0 , 0
[_LAMPWATTAGE] 431
[_PHYSICALDIMENSIONS] 3, 1.2, 0.5
[_VLC_ENABLED]
[_VLC_SIGNALING_APERTURE] 0, 0, 0
[_MOUNTING] ARM MOUNT
[_FAMILY] D-Series Area Size 2
[_PRODUCTID] 3c4e94d5-a3fc-41e4-8efc-12fe93d1a248
[_ABSOLUTE] NOTE: DATA SHOWN IS ABSOLUTE FOR THE SAMPLE PROVIDED.
[_ABSOLUTELUMENS] 20043
[_CRI] 70

20 FEET BETWEEN AXIS TICK-MARKS
LUMENS PER LAMP = -1

[_INPUT_ELECTRICAL] 120.1 VOLTS, 206.7 WATTS, 1.73 AMPS
[_TEMP0] AMBIENT: 25.1

LIGHT LOSS FACTOR = 0.85
OPTICAL HEIGHT = 15 FEET
ARM LENGTH = 8 FEET
TILT = 0 DEGREES FROM NADIR
MAXIMUM ILLUMINANCE = 25.1 FOOTCANDLES

COLOR TEMPERATURE: 3000K

POLE LIGHT 1

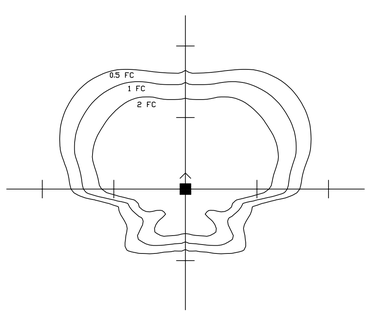

IESNA:LM-63-2002
[TEST] 22604P114
[TESTDATE] 11/5/2012
[ISSUEDATE] 1/11/2016
[TESTLAB] SCALED PHOTOMETRY
[TESTMETHOD]
[MANUFAC] Lithonia Lighting
[LUMCAT] DSXW2 LED 30C 1000 30K T4M MVOLT
[LUMINAIRE] DSXW2 LED WITH 3 LIGHT ENGINES, 30 LED's, 1000mA DRIVER, 3000K LED, TYPE 4 MEDIUM OPTIC
[LAMPCAT] NICHIA 219B 3000K
[LAMP] LED
[BALLAST] LEDINTA350C210DHO
[BALLASTCAT]
[DISTRIBUTION] TYPE IV, SHORT, BUG RATING: B2 - U0 - G2
[_TOTALLUMINAIRELUMENS] 10364.9
[_LAMPPOSITION] 0 , 0
[_LAMPTYPE] LED
[_LAMPWATTAGE] 25.110000610351 6
[_MOUNTING] Wall
[_FAMILY] D-Series Wall Size 2
[_PRODUCTID] 822548bf-8a60-4405-83ed-62ba8f58e9c6
[_SCALED_TEST] SCALED FROM ABSOLUTE TEST: 22604P0

20 FEET BETWEEN AXIS TICK-MARKS
LUMENS PER LAMP = -1
LIGHT LOSS FACTOR = 0.85
OPTICAL HEIGHT = 10 FEET
ARM LENGTH = 0 FEET
TILT = 0 DEGREES FROM NADIR
MAXIMUM ILLUMINANCE = 13.5 FOOTCANDLES

COLOR TEMPERATURE: 3000K

WALL PACK 1

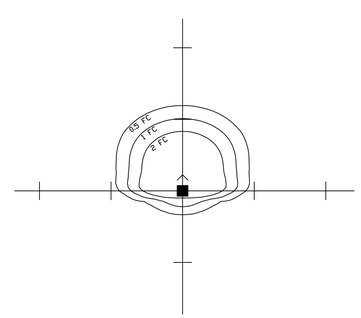

IESNA:LM-63-2002
[TEST] ISF 30965P17
[TESTDATE] 5/16/2016
[ISSUEDATE] 12/3/2017
[TESTLAB] SCALED PHOTOMETRY
[TESTMETHOD]
[MANUFAC] Lithonia Lighting
[LUMCAT] WST LED P2 30K VF MVOLT
[LUMINAIRE] WST LED, Performance package 2, 3000 K, visual comfort forward throw, MVOLT
[LAMPCAT]
[LAMP] LED
[BALLAST] LED DRIVER
[BALLASTCAT]
[DISTRIBUTION] TYPE III, VERY SHORT, BUG RATING: B1 - U0 - G1
[_TOTALLUMINAIRELUMENS] 3236.4
[_LAMPPOSITION] 0 , 0
[_LAMPTYPE] LED
[_PHYSICALDIMENSIONS] 0.63, 1, 0
[_VLC_ENABLED]
[_VLC_SIGNALING_APERTURE] 0, 0, 0
[_MOUNTING] WALL MOUNT
[_FAMILY] WST-LED
[_PRODUCTID] b553a910-da45-46da-a089-eba7e9ab1693
[_ABSOLUTE] NOTE: DATA SHOWN IS ABSOLUTE FOR THE SAMPLE PROVIDED.
[_ABSOLUTELUMENS] 1696
[_INPUT_ELECTRICAL] 120.1 VOLTS, 11.7 WATTS, 0.987 AMPS
[_TEMP0] AMBIENT: 25.0

20 FEET BETWEEN AXIS TICK-MARKS
LUMENS PER LAMP = -1
LIGHT LOSS FACTOR = 0.85
OPTICAL HEIGHT = 10 FEET
ARM LENGTH = 0 FEET
TILT = 0 DEGREES FROM NADIR
MAXIMUM ILLUMINANCE = 12.4 FOOTCANDLES

COLOR TEMPERATURE: 3000K

WALL PACK 2

JAMES A. CLANCY

Professional Engineer & Land Surveyor	NJ LIC. # 33996	2/12/20
Professional Planner	NJ LIC. # 04200	Date
Professional Engineer	PA LIC. # 12078	
Professional Engineer	DE LIC. # 12340	
Professional Land Surveyor	PA LIC. # 61357	

H. C. E. & S., LLC
CONSULTING ENGINEERS
Engineers • Land Surveyors • Planners
601 Asbury Avenue
National Park, NJ 08063
Phone: (856) 853-7306
Fax: (856) 853-7381
CERTIFICATE OF AUTHORIZATION NO. 24GA27945500

GENERAL DETAILS

FOR

542, 546 & 546.5 NORTH BROADWAY

LOT(S): 2 & 3
BLOCK: 117, PLATE: 1
TOWNSHIP OF PENNSVILLE
SALEM COUNTY, NEW JERSEY

CLIENT: ARCR PROPERTIES, LLC	
DATE: 9/27/19	DRAWN: RAS
JOB#: C-25319	SCALE: NONE
CHECKED: JAC	SHEET: 8 OF 8

- REVISIONS -

ISSUE	DATE	DESCRIPTION