Township of Pennsville County of Salem State of New Jersey-

Office of the Township's Housing Inspector

April 2, 2020

As we all navigate the ever changing situation surrounding the COVID-19 reality and operate under the current State of Emergency, the Township of Pennsville is forced to make some changes to business as usual to protect our residents and employees and help reduce the spread. Effective immediately all requests for "Change of Tenant" inspections will be handled as follows.

When submitting the rental application and inspection fees, the applicant will also complete and sign addendum 1 "Covid-19 Temporary Certification Application". As a part of this application and, the property owner or agent will be verifying that all life safety requirements are in place and operating and a minimum of 6 photos of the interior conditions must be submitted. Photographs (short videos) should be emailed to pvfirecode@pvtwp.com. Upon receipt of the above, a visual inspection of the exterior will be conducted and a Temporary Certificate of Continued Occupancy (TCCO) will be issued. The condition of the TCCO will be that when the State of Emergency is lifted, an inspection will be scheduled by you with our office for the interior of the dwelling unit.

We thank you In advance for your understanding and wish to stress that we continue to be here to assist our residents.

Addendum 1

Covid-19 Temporary Certificate Application

Effective April 2, 2020

I _____ (print name), the Property Owner (Agent) by my signature affixed below do certify to the Township of Pennsville that I have checked the interior of the dwelling unit at _____ (address) for all life safety requirements and those items on the attached inspection list, corrected any deficiencies, and have found the unit to be in satisfactory condition. I also have provided via email pvfirecode@pvtwp.com a minimum of six photographs or a short video of the interior conditions. I acknowledge that after an exterior inspection of the property by the Township a Temporary Certificate of Continued Occupancy may be issued. I additionally understand, that it will be my responsibility to schedule an interior inspection of the unit when the current "state of Emergency" is lifted.

_____ _____

Signature Date

Township of Pennsville

Construction Code Office
90 North Broadway
Pennsville, New Jersey 08070
856-678-3089 ext 143 Fax: 856-678-7388

CERTIFICATE OF OCCUPANCY APPLICATION

C.O. # _____

DATE: _____ BLOCK-LOT: _____

INSPECTION ADDRESS: _____

TYPE OF STRUCTURE: SF_____ DUPLEX_____ MF_____ #UNITS_____

OWNER/SELLER (circle one) _____

MAILING ADDRESS: _____

CITY: _____ STATE: _____ ZIP: _____

PHONE: _____ E-MAIL: _____

IS BUYER THE OCCUPANT? YES/NO (circle one) IF NO, NAME AND ADDRESS OF BUYER:

After Purchase _____

_____

LIST NAMES OF ALL OCCUPANTS: Buyers/Tenant (circle one)

			AGE
1.	_____	Adult/Child (circle one)	_____
2.	_____	Adult/Child	_____
3.	_____	Adult/Child	_____
4.	_____	Adult/Child	_____
5.	_____	Adult/Child	_____

AGENCY NAME: _____ PHONE/FAX: _____

ADDRESS: _____

CITY: _____ STATE: _____ ZIP: _____

AGENT NAME: _____ PHONE/FAX: _____

AGENT E-MAIL: _____

PLEASE NOTE: **REINSPECTIONS AND CORRECTIONS *MUST* BE MADE *BEFORE* TENANTS OR NEW OWNERS ARE PERMITTED TO MOVE IN.**

INSPECTION DATE: _____ TIME: _____ PASS____ FAIL____

RE-INSPECTION DATE: _____ TIME: _____ PASS____ FAIL____

3rd INSPECTION DATE: _____ TIME: _____ PASS____ FAIL____

FEE: INSPECTION FEE: PAID: _____ OWES: _____ CHECK#: _____

2nd INSPECTION FEE: PAID: _____ OWES: _____ CHECK#: _____

3rd INSPECTION FEE: PAID: _____ OWES: _____ CHECK#: _____

ARE TAXES CURRENT? YES NO DELINQUENT AMOUNT DUE $_____

IS SEWER CURRENT? YES NO DELINQUENT AMOUNT DUE $_____

IS WATER CURRENT? YES NO DELINQUENT AMOUNT DUE $_____

OPEN PERMIT? YES NO OPEN PERMIT NUMBER _____

TOWNSHIP OF PENNSVILLE

APPLICATION FOR ONE & TWO FAMILY DWELLING CERTIFICATE OF SMOKE DETECTOR AND CARBON MONOXIDE ALARM COMPLIANCE

*Note: **ALL BOXES MUST BE CHECKED IN ORDER FOR CERTIFICATE OF OCCUPANCY TO BE VALID**

- ❑ Smoke detector and Carbon Monoxide detectors are located on every level of the residence, (basement, first floor, second floor) excluding crawl space and unfinished attics
- ❑ Smoke detectors are located in every sleeping area and within the living areas.
- ❑ Smoke detector and carbon monoxide alarm outside each separate sleeping area; and within 10 feet of bedrooms.
- ❑ Carbon monoxide in basement area and finished attics.
- ❑ All smoke detectors and carbon monoxide alarms are in working order.

This is a _____ story dwelling ❑ with ❑ without a basement

Applicant certifies that all statements and information made and provided as part of this application are true to the best of his knowledge, information and belief.

Signature: _____ Date: _____

TOWNSHIP OF PENNSVILLE

MINIMUM C/O REQUIREMENTS FOR HOUSING INSPECTIONS

- Smoke detector in each sleeping area mounted on ceiling over door around 6 inches from ceiling per Township Ordinance Chapter 7 sec 7.2-9 A
- One smoke detector and carbon detector in hallways within 10 ft. from bedrooms
- One smoke detector and carbon detector on each level of home including basements, finished attics, and outside heater rooms
- One fire extinguisher, mounted near kitchen area closest to an exit door, expiration of extinguisher, by NFPA, is 5 years. The bottom of the extinguisher is usually stamped with a manufacturing date. The top of the extinguisher must not be more than 5 feet above the floor
- Follow the NFPA 5:70-4.19 for Smoke and Carbon alarms and portable fire extinguishers
- GCI outlets within 6 ft. of any type of sink, washer, water source, exterior outlets, pools, spas, garages and basements
- All electrical wiring, outlets, lighting must be properly installed and in good condition
- All heaters must be on and working in colder months
- Chimney stacks must be in good condition and chimney certificate is required for fireplaces
- Hot water heaters must be on and working. Temperature minimum 110 F and cannot burn any person. Relief valve on hot water heater must be extended within two inches from floor
- Any gas meter or appliance in the path of a vehicle (driveway or garage) must be protected. Please contact the Construction Code Official for proper installation
- Exterior of home or rental must be in good clean presentable condition
- Interior of home or rental must be in good clean presentable condition
- All doors and windows must be working and screens in all windows that open. There must be one egress window in each sleeping area
- Handrails must be on any stairway over three steps. Porch or deck area over three steps high must have rails and spindles. Spindles not more than 4 inches apart
- Deck or stair boards must be properly secured and in safe condition
- If there is a light over a shelf in any closet or room it must have a globe protecting the bulb
- If there is a pool or hot tub in yard, fence and gates must be to code. Please check with the Construction Code Office for further details
- All gutters and downspouts must be in place and working properly
- All plumbing drains, water lines, toilets, tubs, sinks and faucets must be working properly
- All surfaces, including walls and ceilings must be free of chipped or loose paint and mold

KEEP IN MIND THESE ARE MINIMUM REQUIREMENTS AND THE HOUSING OFFICE FOLLOWS THE CURRENT VERSION OF THE INTERNATIONS PROPERTY MAINTENANCE CODE AVAILABLE FOR REVIEW IN THE CODE OFFICE.

SAFETY FOR OUR RESIDENTS OF PENNSVILLE TOWNSHIP IS OUR MAIN PRIORITY

THANK YOU FOR YOUR PARTICIPATION IN KEEPING OUR TOWN SAFE AND CLEAN

TOWNSHIP OF PENNSVILLE HOUSING DEPARTMENT

TOWNSHIP OF PENNSVILLE
HOUSING CHECKLIST

OWNER: _____ DATE: ____/____/____

ADDRESS: _____ TIME: _____ AM PM

TELEPHONE: _____

TAX MAP LOCATION: _____ C/O # _____

DOORS	NOTES	REJ.
BACK DOOR		
CELLAR DOOR		
FRONT DOOR		
FRAMES		
HANDLES		
HINGES		
KNOBS		
LOCKS		
PANES		
SILLS		

ELECTRIC	NOTES	REJ.
LIGHTS		
PLATES		
RECEPTACLES		
SWITCHES		
WIRING		
OPERATING ELECTRIC SYSTEM		
GFI REQUIRED WITHIN 72" OF WATER SOURCE		

FLOORS	NOTES	REJ.
FIN. FLOOR		
JOISTS		
SILLS		
SUB FLOORS		

PORCHES	NOTES	REJ.
FLOORING		
JOISTS		
POSTS		
RAILINGS		
STEPS		

PLUMBING	NOTES	REJ.
SEPTIC TANK		
FAUCETS		
FIXTURES		
BATH		
KITCHEN		
PIPES		
SEWER PIPES		
WATER HEATER		
RELIEF VALVE EXTENSION PIPE		

ROOF	NOTES	REJ.
CORNICES		
COVERING		
EAVES		
RAFTERS		
ROOF BOARDS		
ROOF LEAKS		
TRIM		
GUTTERS		
DOWNSPOUTS		

WALLS & CEILINGS	NOTES	REJ.
CEILING		
CEILING JOISTS		
HOLES		
PLASTER		
TRIM		
MOLD		

WINDOWS	NOTES	REJ.
CELLAR WINDOWS		
FRAMES		
LOCKS		
PANES		
ROPES		
SILLS		
STORM WINDOWS		
WEIGHTS		
SCREENS		

MISC.	NOTES	REJ.
BANISTERS		
CHIMNEY		
FOUNDATION		
HEATER		
SIDING		
STEPS		
STAIRS		
YARD		
SMOKE DETECTOR		
CARBON MONOXIDE		
JUNK VEHICLES		

OPEN BUILDING PERMITS # _____

UNPAID TAXES _____ UNPAID SEWER _____ UNPAID WATER _____

NO SHOW YES/NO FIRE EXTINGUISHER YES/NO

CANCELLATIONS MUST BE MADE NO LATER THAN 24 HOURS BEFORE THE SCHEDULED APPOINTMENT.

REMARKS

5:70-4.19 Smoke alarms for one- and two-family dwellings; carbon monoxide alarms; and portable fire extinguishers

(a) In one- and two-family or attached single family dwellings subject to the requirements of N.J.A.C. 5:70-2.3, smoke alarms shall be installed as follows:

1. On each level of the premises; and
2. Outside of each separate sleeping area.

(b) The smoke alarms required in (a) above shall be located and maintained in accordance with NFPA 72.

1. The alarms shall not be required to be interconnected.

(c) Ten-year sealed battery-powered single station smoke alarms shall be installed and shall be listed in accordance with ANSI/UL 217, incorporated herein by reference. However, A/C-powered single or multiple-station smoke alarms installed as part of the original construction or rehabilitation project shall not be replaced with battery-powered smoke alarms.The effective date of this subsection shall be January 1, 2019.

1. A/C-powered smoke alarms shall be accepted as meeting the requirements of this section.

(d) Carbon monoxide alarms shall be installed in all dwelling units in buildings in one- and two-family or attached single family dwellings, except for units in buildings that do not contain a fuel-burning device or have an attached garage, as follows:

1. Single station carbon monoxide alarms shall be installed and maintained in the immediate vicinity of the sleeping area(s).
2. Carbon monoxide alarms may be battery-operated, hard-wired or of the plug-in type and shall be listed and labeled in accordance with UL-2034 and shall be installed in accordance with the requirements of this section and NFPA-720.

(e) A portable fire extinguisher shall be installed in accordance with the following:

1. The extinguisher shall be within 10 feet of the kitchen and located in the path of egress;
2. The extinguisher shall be readily accessible and not obstructed from view;
3. The extinguisher shall be mounted using the manufacturer's hanging bracket so the operating instructions are clearly visible;
4. The extinguisher shall be an approved listed and labeled type with a minimum rating of 2A-10B:C and no more than 10 pounds;
5. The owner's manual or written operation instructions shall be provided during the inspection and left for the new occupant;
6. The extinguisher shall be serviced and tagged by a certified Division of Fire Safety contractor within the past 12 months or the seller must have a receipt for a recently purchased extinguisher; and
7. The top of the extinguisher shall not be more than five feet above the floor.
8. Exception: Portable fire extinguishers shall not be required for seasonal summer units. For purposes of applying this exception, "seasonal summer unit" shall mean a dwelling unit rented for a term of not more than 125 consecutive days for residential purposes by a person having a permanent residence elsewhere, but shall not include use or rental of living quarters by migrant, temporary, or seasonal workers in connection with any work or place where work is being performed.

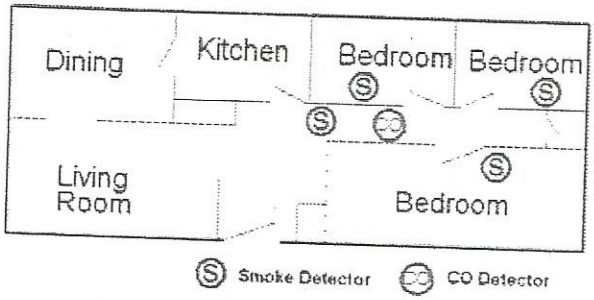

Figure 1

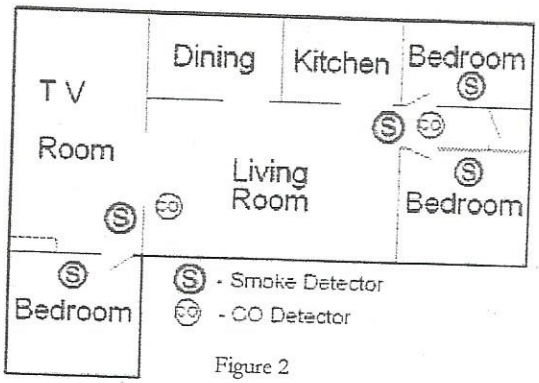

Figure 2

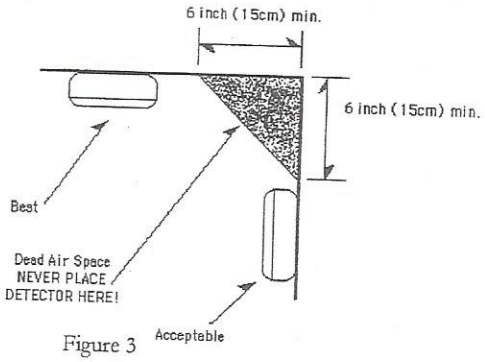

Figure 3

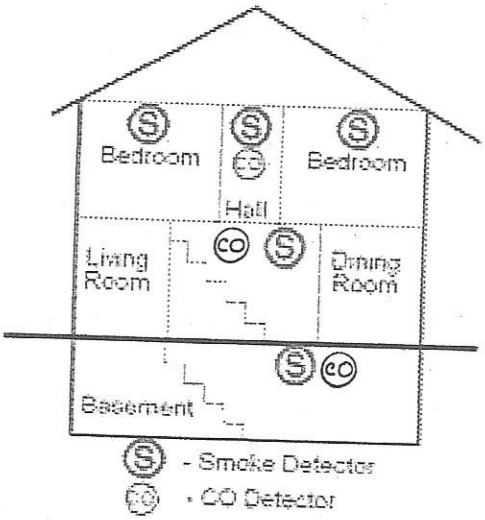

Figure 4

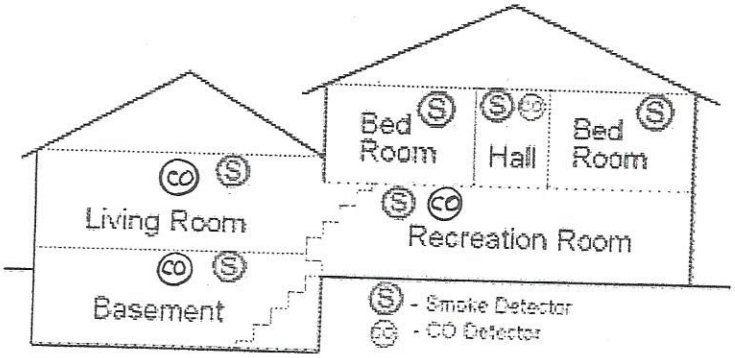

Figure 5

Follow the Manufacturer's installation instruction.
Make sure the product you purchase has the laboratory label, insuring that samples of the model you are buying have been carefully tested.